WIRELESS ENGINEER

The Journal of Radio Research and Progress

Managing Editor: HUGH S. POCOCK, M.I.E.E.

Editor: W. T. COCKING, M.I.E.E. Technical Editor: Professor G. W. O. HOWE, D.Sc., LL.D., M.I.E.E.

Editorial Advisory Board:

P. A. T. BEVAN, B.Sc., A.M.I.E.E. (British Broadcasting Corporation); F. M. COLEBROOK, B.Sc., A.C.G.I. (National Physical Laboratory); Professor E. B. MOULLIN, Sc.D., M.I.E.E.; A. H. MUMFORD, O.B.E., B.Sc. (Eng.), M.I.E.E. (G.P.O. Engineering Department); R. L. SMITH-ROSE, D.Sc., Ph.D., M.I.E.E. (Department of Scientific and Industrial Research).

DECEMBER 1951

Vol. XXVIII **No. 339**

CONTENTS

EDITORIAL: Photographing Sound and Microwave Space Patterns 351

MUTUAL IMPEDANCE OF WIRE AERIALS. By L. Lewin 352

DIPOLE AERIALS IN CLOSE PROXIMITY. By R. G. Medhurst, B.Sc. 356

AUTOMATIC ATMOSPHERICS-WAVEFORM RECORDER. By C. Clarke and D. E. Mortimer, B.Sc. .. 359

DIRECTIONAL-COUPLER ERRORS. By F. A. Benson, M.Eng. 371

CORRESPONDENCE 373

NEW BOOKS 374

ABSTRACTS AND REFERENCES. Nos. 2885-3191. A.225-A.246

INDEX TO ARTICLES AND AUTHORS. Vol. XXVIII. January to December, 1951.

Published on the sixth of each month

Annual Subscription: Home and Overseas, one year £2 4s. 6d., six months, £1 2s. 3d. Canada and U.S.A. $7.00

Editorial, Advertising and Publishing Offices

DORSET HOUSE, STAMFORD STREET, LONDON, S.E.1

Telephone: WATerloo 3333 (60 lines) Telegrams: Wirenger, Sedist, London

BRANCH OFFICES AT COVENTRY · BIRMINGHAM · MANCHESTER AND GLASGOW

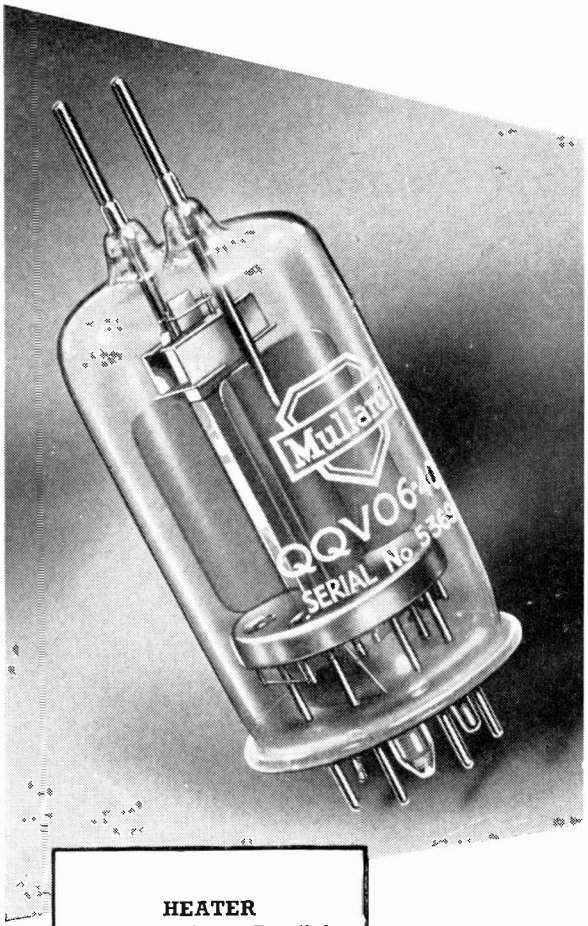

HIGH EFFICIENCY AT V.H.F. with this new MULLARD DOUBLE TETRODE

The new Mullard double-tetrode, QQV06-40, is designed for wide-band operation as an R.F. Amplifier, Modulator, or Frequency Doubler and Tripler.

An improved version of the American 829B, the QQV06-40 has the outstanding advantage of very small output capacitances which permit its use at frequencies up to 500 Mc/s. In addition, the comparatively low inter-electrode inductance of this valve, obtained by the use of a common box screen grid, enables it to operate at V.H.F. with a higher stability than has yet been attained by valves in this class.

When used in tuned-anode, tuned-grid transmitters, the stability of this double-tetrode is increased even further by the use of internal neutralizing condensers.

Other important design features are:—

1. Direct and short connections between pins and electrodes, causing lower inductance and resistance.
2. No insulating parts (mica or ceramics) between anodes, resulting in lower losses at V.H.F.
3. Screened micas, preventing possible losses due to contaminated mica.

Brief technical information on the QQV06-40 is given here. Full information on this and other valves in the Mullard range will be supplied on request to the address below.

HEATER

	Series	Parallel
V_h	12.6	6.3 V
I_h	0.9	1.8 A

CAPACITANCES

Each section

$C_{g1\text{-}all}$	10.5 μμF
$C_{a\text{-}all}$	3.2 μμF
$C_{a\text{-}g1}$	<0.08 μμF

Two sections in push-pull

C_{out}	2.1 μμF
C_{in}	6.7 μμF

LIMITING VALUES

V_a max.	600 V
p_a max.	2 x 20 W
V_{g2} max.	250 V
p_{g2} max.	2 x 3 W
V_{g1} max.	−175 V
p_{g1} max.	2 x 1 W
I_k max.	2 x 120 mA
f max. (at reduced ratings)	486 Mc/s

BASE: B7A

Mullard

MULLARD LTD · COMMUNICATIONS AND INDUSTRIAL VALVE DEPARTMENT
CENTURY HOUSE · SHAFTESBURY AVENUE · LONDON · WC2

MVT 110

WIRELESS ENGINEER

Vol. XXVIII DECEMBER 1951 No. 339

Photographing Sound and Microwave Space Patterns

IN the Editorial of January 1951 we described some interesting work on Refracting Sound Waves carried out by Kock and Harvey of the Bell Telephone Laboratories and published by the Acoustical Society of America. In the July number of the *Bell System Technical Journal* the same authors describe a method of photographing the wave pattern produced by acoustic prisms and lenses, and a number of very interesting photographs are reproduced. As shown diagrammatically in Fig. 1, a probe microphone M is carried at the end of a rod which is moved up and down in front of the lens; S is the source of the sound waves. The motor which rocks the rod also causes the carriage which supports the rod to

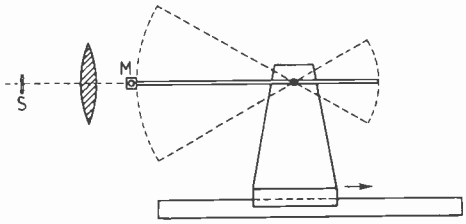

Fig. 1.

move slowly away from the lens, so that successive sweeps of the microphone are carried out at a gradually increasing distance from the lens, thus exploring a vertical section through the axis of the sound field. Attached to the side of the microphone is a small neon lamp which is energized by the amplified output of the microphone, so that the brightness of the lamp varies according to the intensity of the sound wave. The lamp is photographed by a camera a few feet away, the camera

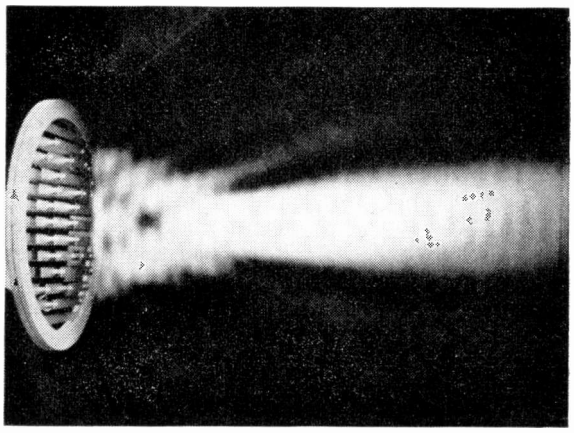

Fig. 2. *Courtesy Bell System Tech J.*

being of a type that has a development time of one minute, so that the record can be inspected almost immediately after the scanning run has been completed. Electromagnetic microwaves can be explored in the same way by substituting a pick-up probe for the microphone. The rod makes 30 strokes a minute, sweeping through about 60°; the horizontal movement is 0·1 in. per stroke; an average scan of 300 strokes thus takes 10 minutes to carry out.

Figure 2 shows the result obtained from a 10-in. lens of the type shown in Fig. 4 of the January Editorial; the frequency was 9 kc/s ($\lambda =$

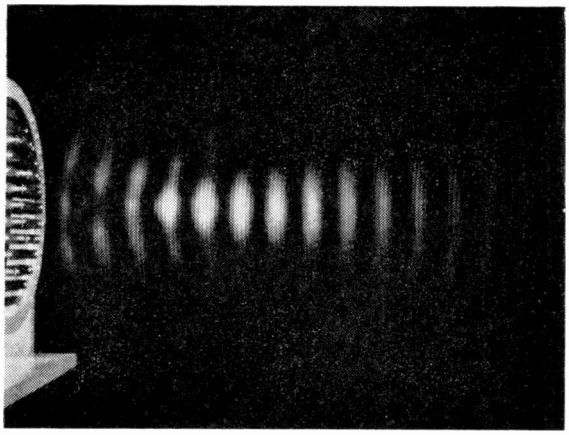

Fig. 3. *Courtesy Bell System Tech. J.*

1·51 in.). It shows clearly the complexity in the neighbourhood of the lens and the gradual emergence of the main beam. Figure 3 shows the result of adding a signal of constant phase to that of the scanning microphone, thus producing interference and showing the wave crests moving to the right; the authors emphasize that these are not standing waves.

As the neon and argon lamps employed only operate over a range of from 70 to 120 V, whereas the variation of amplitude of the waves covers a much greater range, special amplifier circuits must be employed to give the necessary compression.

The object of this editorial note is to draw attention to the original article which is illustrated with a large number of very interesting photographs.

G. W. O. H.

MUTUAL IMPEDANCE OF WIRE AERIALS*

By L. Lewin

(*Standard Telecommunication Laboratories, Ltd.*)

1. Introduction

THE radiation resistance of a wire aerial carrying a sinusoidal current was first calculated by Van der Pol,[1] by considering the Poynting flux over a large sphere enclosing the aerial. Although suitable for single aerials, this method becomes very cumbersome when applied to parallel arrays.[2] A neater method was introduced by Pistolkors,[3] the so-called induced-e.m.f. method, which had the advantage of exhibiting also the reactive component due to the radiation. The two methods were proved equivalent by Bechmann,[4] who also introduced the use of the Hertzian vector as a subsidiary quantity in these calculations. He showed that the single integration required in the formation of the Hertzian vector was sufficient for the determination of the radiation impedance when the various aerials were parallel, and carried sinusoidal currents. This is not so when the aerials are not parallel, although the analysis can be carried to the stage where the impedance is presented as an integral of a somewhat complicated function. It has generally been supposed[5,6] that this integration cannot be completed with the use of the usual tabulated functions. This is not correct, however, and the particular case of the radiation resistance of a rhombic aerial, which involves the non-parallel wire case, has been obtained[7] in a closed form by means of a change of variable whereby the formula is integrated in terms of the Si and Ci functions.

In general, the integration of the expression for the mutual impedance of two wire aerials, in any relative position, can be obtained by presenting the various trigonometrical terms which occur in terms of exponentials, multiplying out, and taking the argument of each exponential in turn as a new variable of integration for that term. The transformed integrands simplify considerably, and are readily reduced to the well-known $\int \frac{e^{jx}}{x}\,dx$ form.

This method is illustrated in the following sections with an investigation of the mutual impedance of two co-planar half-wave dipoles, in arbitrary positions. The general case of arbitrary length and end loading may be carried out in a similar way. All these cases, however, are limited to currents which are sinusoidal and propagate along the wire with the free space wavelength; i.e., the currents satisfy

$$\partial^2 I/\partial x^2 + k^2 I = 0 \text{ where } k = 2\pi/\lambda$$

2. General Formulae

Bechmann[4] has derived a formula for the power radiated by a system of aerials, from which the

MS accepted by the Editor February 1951

* We wish to draw attention also to the paper by R. G. Medhurst on p. 356. The two papers were received within one day of each other and deal with essentially the same problem but in different ways, and we feel that it is of interest to compare the two methods.—Ed.

following form for the mutual impedance between two aerials is readily deduced.

$$Z_{12} = -\int E_{1t} I_2^*(t_2) dt_2 / (I_1 I_2^*) \text{ ohms} \quad .. \quad (1)$$

where

Z_{12} (ohms) is the mutual impedance between aerials 1 and 2,
E_{1t} (V/cm) is the tangential component of electric field produced by aerial 1 at aerial 2,
$I_2(t_2)$ (A) is the current in aerial 2,
t_2(cm) is the axial co-ordinate for aerial 2,
I_1 and I_2 are the currents in the two aerials at the feed points at which the impedances are required.

An asterisk denotes the complex conjugate, and all quantities are here referred to the time vector $e^{j\omega t}$.

The integration in (1) is carried out over the length of aerial 2.

E_{1t} may be obtained from the Hertzian vector $\mathbf{\Pi_1}$ by the relation

$$\mathbf{E} = [\text{grad div} + k^2]\mathbf{\Pi_1} \quad .. \quad .. \quad (2)$$

and $\mathbf{\Pi_1}$ is given by

$$\mathbf{\Pi_1} = -30(j/k)\int (e^{-jkR}/R)\mathbf{I_1}(\mathbf{t_1})dt_1 \quad .. \quad (3)$$

The integration is performed over the length of aerial 1, and R is the distance between t_1 and a field point.

3. Half-wave Dipole with Sinusoidal Current

Let us take co-ordinates x, y and z relative to the dipole centre, x being parallel to the dipole axis (see Fig. 1). $I_1(t_1)$ in (3) becomes $I_1 \cos(kx')$ where x' has been written as the current co-ordinate, and I_1 is the current amplitude.

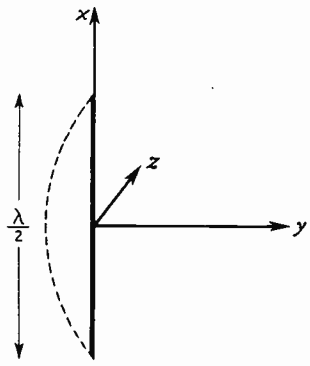

Fig. 1. *Half-wave dipole and co-ordinate system.*

Equation (2) gives

$$E_x = (\partial^2/\partial x^2 + k^2)\,\Pi\,; \qquad E_y = \partial^2 \Pi/\partial x \partial y\,;$$
$$E_z = \partial^2 \Pi/\partial x \partial z \quad .. \quad .. \quad .. \quad .. \quad (4)$$

where $\Pi = -(30jI_1/k)\int_{-\lambda/4}^{\lambda/4} \cos(kx') \times$

$$\frac{e^{-jk[y^2+z^2+(x-x')^2]^{\frac{1}{2}}}}{[y^2+z^2+(x-x')^2]^{\frac{1}{2}}}\,dx' \quad .. \quad (5)$$

The integration in (5) is readily performed by replacing $\cos(kx')$ by $\frac{1}{2}e^{jkx'} + \frac{1}{2}e^{-jkx'}$ and taking $[y^2 + z^2 + (x - x')^2]^{\frac{1}{2}} \pm x'$ as new variables, one for each term. The integration involves the exponential integral, but this disappears when the result is substituted into (4) on account of the differentiations. If we confine ourselves to the x, y plane, $z = 0$ and (4) reduces to

$$E_x = -30jI_1[e^{-jkr}/r + e^{-jks}/s]$$
$$E_y = 30jI_1\left[\frac{x-\lambda/4}{y}e^{-jkr}/r + \frac{x+\lambda/4}{y}e^{-jks}/s\right]$$
$$.. \quad .. \quad .. \quad (6)$$

r and s are the distances from the ends of the dipole to the field point, and are given by

$$r = [y^2 + (x - \lambda/4)^2]^{\frac{1}{2}}$$
$$s = [y^2 + (x + \lambda/4)^2]^{\frac{1}{2}} \quad .. \quad .. \quad (7)$$

4. Mutual Impedance Between Half-wave Dipoles

Equation (6) forms the basis for the present investigation. The two dipoles (see Fig. 2) are located by the distances a and b from their centres to the point of intersection of their axes, and by the angle θ between them. We take co-ordinates x, y relative to the centre of the first dipole, and an axial co-ordinate t relative to the centre of the second. The following geometrical relations connecting the co-ordinates of a point on aerial 2 are at once apparent

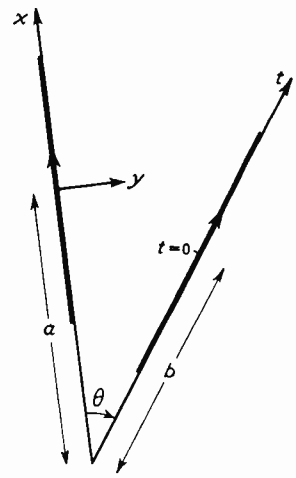

Fig. 2. *Two dipoles in arbitrary position.*

$$y = (b + t)\sin\theta\,; \qquad (a + x) = (b + t)\cos\theta \quad (8)$$

E_{1t}, the tangential electric field produced by dipole 1 at the surface of dipole 2 is equal to $E_t = E_x \cos\theta + E_y \sin\theta$. After a little simplification, using (6) and (8) it is found that

$$E_t = -30jI_1\left\{\frac{a+\lambda/4}{b+t}e^{-jkr}/r + \frac{a-\lambda/4}{b+t}e^{-jks}/s\right\} \quad .. \quad .. \quad .. \quad (9)$$

where

$$r = [(b+t)^2 + (a+\lambda/4)^2 - 2(b+t)(a+\lambda/4)\cos\theta]^{\frac{1}{2}}$$
$$s = [(b+t)^2 + (a-\lambda/4)^2 - 2(b+t)(a-\lambda/4)\cos\theta]^{\frac{1}{2}}$$

Taking the current in dipole 2 as $I_2 \cos(kt) = \frac{1}{2}I_2(e^{jkt} + e^{-jkt})$ and referring all impedances to the current maxima, equation (1) gives

$$Z_{12} = 15j \int_{-\lambda/4}^{\lambda/4} \frac{e^{jkt} + e^{-jkt}}{b + t} [(a + \lambda/4)e^{-jkr}/r + (a - \lambda/4)e^{-jks}/s]dt \quad \ldots \quad (10)$$

If the integrand is multiplied out there result four terms, of which that involving $e^{-jk(r+t)}$ is typical. If we insert an additional factor e^{-jkb}, this term becomes, dropping for the time being the initial $15j$,

$$Z = e^{jkb}(a + \lambda/4) \int_{-\lambda/4}^{\lambda/4} \frac{e^{-jk(r+t+b)}}{r(t + b)} dt \quad \ldots \quad (11)$$

r is given by (9). Make the substitution $r + t + b = \omega$. Solving for $b + t$ gives

$$b + t = \frac{\omega^2 - (a + \lambda/4)^2}{2[\omega - (a + \lambda/4) \cos \theta]} \quad \ldots \quad (12)$$

whence

$$r = \frac{\omega^2 - 2\omega(a + \lambda/4) \cos \theta + (a + \lambda/4)^2}{2[\omega - (a + \lambda/4) \cos \theta]} \quad (13)$$

Differentiating (12) we find

$$dt = \frac{\omega^2 - 2\omega(a + \lambda/4) \cos \theta + (a + \lambda/4)^2}{2[\omega - (a + \lambda/4) \cos \theta]^2} d\omega$$

$$= \frac{2r(b + t)}{\omega^2 - (a + \lambda/4)^2} d\omega$$

from (12) and (13).

Substituting in (11)

$$Z = e^{jkb} \int e^{-jk\omega} \frac{2(a + \lambda/4)}{\omega^2 - (a + \lambda/4)^2} d\omega$$

$$= e^{jkb} \int \left[\frac{e^{-jk(\omega - a - \lambda/4)}}{\omega - a - \lambda/4} e^{-jk(a + \lambda/4)} - \frac{e^{-jk(\omega + a + \lambda/4)}}{\omega + a + \lambda/4} e^{jk(a + \lambda/4)} \right] d\omega \quad \ldots \quad (14)$$

and each term is now integrable in terms of the exponential integral, with arguments $\omega \pm (a + \lambda/4)$. We introduce the integral[8]

$$E(x) = -\int_{kx}^{\infty} \frac{e^{-jt}}{t} dt = \mathrm{Ci}(kx) - j[\mathrm{Si}(kx) - \tfrac{1}{2}\pi]$$

Equation (14) gives a contribution to Z_{12} of

$$15 \left\{ e^{-jk(a-b)} E(r + b + t - a - \lambda/4) + e^{jk(a+b)} E(r + b + t + a + \lambda/4) \right\}_{-\lambda/4}^{\lambda/4}$$

Z_{12} is made up of three more similar pairs of terms; and after some simplification, the total expression for Z_{12} is reduced to

$$\begin{aligned} Z_{12} = {} & 15e^{jk(b-a)} [E(S_2 + b - a) + E(R_1 + b - a) \\ & - E(S_1 + b - a + \tfrac{1}{2}\lambda) - E(R_2 + b - a - \tfrac{1}{2}\lambda)] \\ & + 15e^{-jk(b-a)} [E(S_2 - b + a) + E(R_1 - b + a) \\ & - E(S_1 - b + a - \tfrac{1}{2}\lambda) - E(R_2 - b + a + \tfrac{1}{2}\lambda)] \\ & - 15e^{jk(b+a)} [E(S_1 + b + a) + E(R_2 + b + a) - \\ & E(S_2 + b + a - \tfrac{1}{2}\lambda) - E(R_1 + b + a + \tfrac{1}{2}\lambda)] \\ & - 15e^{-jk(b+a)} [E(S_1 - b - a) + E(R_2 - b - a) - \\ & E(S_2 - b - a + \tfrac{1}{2}\lambda) - E(R_1 - b - a - \tfrac{1}{2}\lambda)] \end{aligned} \quad (15)$$

We have introduced the following notation for the four distances between the ends of the dipoles

$$R_1 = [(b + \lambda/4)^2 + (a + \lambda/4)^2 - 2(b + \lambda/4) \times (a + \lambda/4) \cos \theta]^{\frac{1}{2}}$$

$$R_2 = [(b - \lambda/4)^2 + (a + \lambda/4)^2 - 2(b - \lambda/4) \times (a + \lambda/4) \cos \theta]^{\frac{1}{2}}$$

$$S_1 = [(b + \lambda/4)^2 + (a - \lambda/4)^2 - 2(b + \lambda/4) \times (a - \lambda/4) \cos \theta]^{\frac{1}{2}}$$

$$S_2 = [(b - \lambda/4)^2 + (a - \lambda/4)^2 - 2(b - \lambda/4) \times (a - \lambda/4) \cos \theta]^{\frac{1}{2}}$$

The last four terms of (15) involve negative arguments, and the integral is interpreted by the relation $E(-x) = \int^{-kx} \frac{e^{-jt}}{t} dt = \int^{kx} \frac{e^{jt}}{t} dt = \mathrm{Ci}(kx) + j\,\mathrm{Si}(kx) + \text{const.}$ Moreover, since the integrals always occur in pairs of opposite signs, the $\frac{1}{2}\pi$ (or other constant) associated with the $\mathrm{Si}(kx)$ may be dropped in all places.

In proceeding to particular cases of equation (15) care must be taken over some of the arguments, which may vanish. $\mathrm{Ci}(x)$ is logarithmically divergent as $\log x + \gamma$ for small values of x, and limiting values need to be taken (γ is Euler's constant $= 0{\cdot}5772$). Some particular cases of equation (15) follow.

1. $a = b$. *Symmetrical Dipoles.*

$$\begin{aligned} Z_{12} = {} & 30\{E[(a + \lambda/4)2 \sin \tfrac{1}{2}\theta] + E(|a - \lambda/4| \times 2 \sin \tfrac{1}{2}\theta) - E(R + \tfrac{1}{2}\lambda) - E(R - \tfrac{1}{2}\lambda)\} + \\ & 15e^{2jka}\{E(2a - \tfrac{1}{2}\lambda + |a - \lambda/4|2 \sin \tfrac{1}{2}\theta) + E[2a + \tfrac{1}{2}\lambda + (a + \lambda/4)2 \sin \tfrac{1}{2}\theta] - 2E(R + 2a)\} \\ & + 15e^{-2jka}\{E(-2a + \tfrac{1}{2}\lambda + |a - \lambda/4|2 \sin \tfrac{1}{2}\theta) + E[-2a - \tfrac{1}{2}\lambda + (a + \lambda/4)2 \sin \tfrac{1}{2}\theta] - 2E(R - 2a)\} \end{aligned}$$

where $R = 2[a^2 \sin^2 \frac{1}{2}\theta + (\lambda/4)^2 \cos^2 \frac{1}{2}\theta]^{\frac{1}{2}}$ (16)

2. $a = b = \lambda/4$. *Dipoles forming a V.*

$$Z_{12} = 15\{2E(\lambda \sin \tfrac{1}{2}\theta) - E[\lambda(1 + \sin \tfrac{1}{2}\theta)] - E[-\lambda(1 - \sin \tfrac{1}{2}\theta)] + 2 \log (\cos \tfrac{1}{2}\theta)\} \quad (17)$$

3. $a = b = 0$. *Dipoles forming an X.*

$$\begin{aligned} Z_{12} = {} & 30\{2E(\tfrac{1}{2}\lambda \sin \tfrac{1}{2}\theta) + E[\tfrac{1}{2}\lambda(1 + \sin \tfrac{1}{2}\theta)] + E[-\tfrac{1}{2}\lambda(1 - \sin \tfrac{1}{2}\theta)] - \\ & 2E(\tfrac{1}{2}\lambda \cos \tfrac{1}{2}\theta) - E[\tfrac{1}{2}\lambda(1 + \cos \tfrac{1}{2}\theta)] - E[-\tfrac{1}{2}\lambda(1 - \cos \tfrac{1}{2}\theta)]\} \quad \ldots \quad (18) \end{aligned}$$

It will be noticed that in the limit of zero θ, the arrangements of examples 2 and 3 become nominally identical, while equations (17) and (18), though giving the same values of radiation

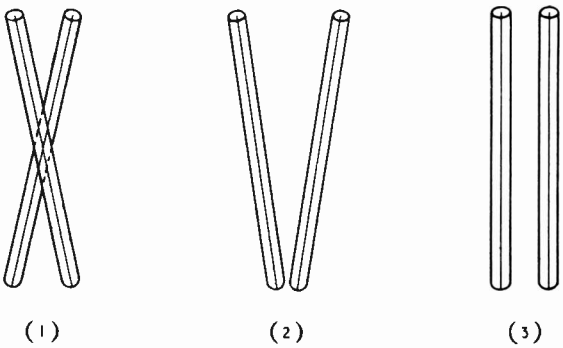

Fig. 3. *Three arrangements of closely-spaced dipoles.*

resistance, give different values for the reactance. Both values are different from the reactance figure usually quoted for the half-wave dipole, and calculated as the limit of the mutual reactance of two parallel dipoles at very small separation. The reason is to be found in the differences between equation (9) for E_t and equation (6) for E_x. When the dipoles are co-linear E_x and E_t mean the same thing, whereas the two equations are manifestly different. When $x > \lambda/4$, so that the dipoles, though co-linear, are physically separated, the two forms can be shown to be equivalent. This is not so when $x < \lambda/4$, in which case the dipoles are in part contact. Equation (6) shows that E_y is infinite at the surface of a dipole, and $\underset{\theta \to 0}{\mathrm{Lt}}\, E_y \sin\theta$ does not vanish: it gives a finite contribution to the axial field, and hence E_x and E_t differ.

Of course, all these considerations are highly

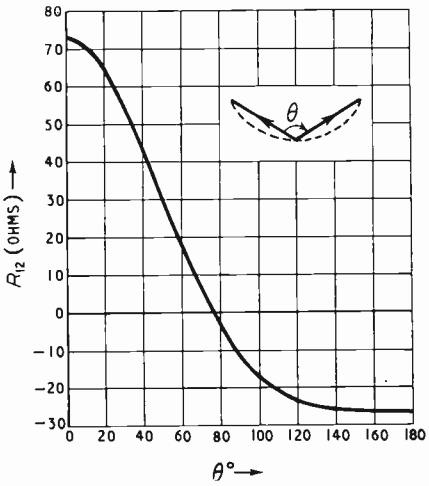

Fig. 4. *Mutual resistance of two half-wave dipoles.*

idealized since any practical aerial has a finite radius, and two such aerials cannot occupy the same physical space. However, Fig. 3 shows some realizable arrangements in which are shown (1) two dipoles in slightly different planes crossing at a small angle, (2) two dipoles 'nearly' forming a V, and (3) two parallel dipoles close together. The considerations of the previous paragraph would lead us to expect the resistive components of the mutual impedances to be much the same in all cases, but the mutual reactances to differ appreciably.

The mutual resistance for two dipoles forming a V can be put in the convenient form

$$R_{12} = 15\{S_1[2\pi(1 + \sin\tfrac{1}{2}\theta)] + S_1[2\pi(1 - \sin\tfrac{1}{2}\theta)] - 2S_1(2\pi \sin\tfrac{1}{2}\theta)\}$$

where

$$S_1(x) = \int_0^x \frac{1 - \cos t}{t}\, dt = \log x + \gamma - \mathrm{Ci}(x)$$

The curve is plotted in Fig. 4.

A similar formula for a half-wave dipole bent at the centre to form a V of included angle θ can be obtained in the same way as the previous formulae. The total radiation resistance is

$$R = 30\{2S_1(\pi \sin\tfrac{1}{2}\theta) - 2S_1(\pi) + S_1[\pi(1 + \sin\tfrac{1}{2}\theta)] + S_1[\pi(1 - \sin\tfrac{1}{2}\theta)]\}$$

The curve is shown in Fig. 5.

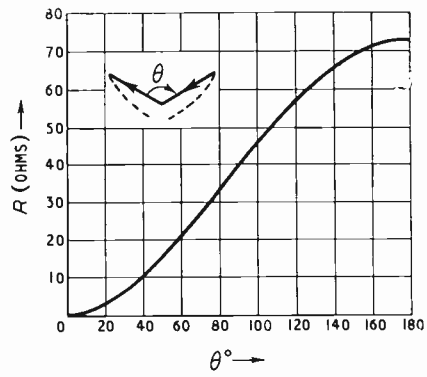

Fig. 5. *Radiation resistance of bent half-wave dipole.*

REFERENCES

[1] B. Van der Pol. "Wavelengths and Radiation of Loaded Antennae." *Proc. Phys. Soc.*, June 1917, Vol. 29, pp. 269-289.

[2] L. Lewin. "Radiation Resistance of a Horizontal Dipole above Earth." *The Marconi Review*, April-June 1939, No. 73.

[3] A. Pistolkors. "The Radiation Resistance of Beam Antennas." *Proc Inst. Radio Engrs*, 1929, Vol. 17, p. 562.

[4] R. Bechmann. "On the Calculation of Radiation Resistance of Antennas and Antenna Combinations." *Proc. Inst. Radio Engrs*, August 1931, Vol. 19, No. 8.

[5] P. S. Carter. "Circuit Relations in Radiating Systems." *Proc. Inst. Radio Engrs*, June 1932, Vol. 20, No. 6.

[6] Ll. G. Chambers. "Input Impedance of two Crossed Dipoles." *Wireless Engineer*, July 1950, Vol. 27, No. 322.

[7] L. Lewin. "Rhombic Transmitting Aerial." *Wireless Engineer*, May 1941, Vol. 18, No. 212.

[8] Jahnke and Emde. "Tables of Functions." Dover Publications, N.Y. On page 3 the notation $Ei^+(iy)$ is used, whereas here we have used the simpler $E(y)$.

DIPOLE AERIALS IN CLOSE PROXIMITY

By R. G. Medhurst, B.Sc.

(*Communication from the Staff of the Research Laboratories of The General Electric Co. Ltd., England.*)

SUMMARY.—It is shown how the integrals developed by Ll. G. Chambers, expressing the mutual impedance between a pair of crossed half-wave dipoles, can be converted into a sum of sine and cosine integrals. The anomalous result when the angle of separation tends to zero is discussed. It is concluded that it is unsafe to use the thin-aerial theory unless the aerials are parallel.

1. Crossed Half-Wave Dipoles

IN a recent paper, Ll. G. Chambers[1] develops integrals [his equation (23)] giving the mutual impedance between two infinitely-thin coplanar half-wave dipoles, crossing at their centres. He says: "While it is impossible to integrate exactly, these integrals may easily be evaluated by quadrature". This has an interesting precedent. In 1932, P. S. Carter, discussing similar integrals, remarked[2] that "The integrals in this equation cannot be expressed in the form of any known tabulated functions and, therefore, are best evaluated mechanically in each particular case." About six months after Carter's paper was published, F. H. Murray[3] showed that Carter's expression could, in fact, be reduced to a sum of a small number of sine and cosine integrals. Murray's method can be used with equal success to deal with Chambers' integrals.

Chambers' expression [his equation (23)] can be written as

$$Z_m = 2R_c(\alpha + j\beta)$$

$$\alpha + j\beta = j\int_0^l \frac{l}{r}\left\{\frac{e^{-jk(r^2 - 2rl\cos\phi + l^2)^{\frac{1}{2}}}}{(r^2 - 2rl\cos\phi + l^2)^{\frac{1}{2}}} - \frac{e^{-jk(r^2 + 2rl\cos\phi + l^2)^{\frac{1}{2}}}}{(r^2 + 2rl\cos\phi + l^2)^{\frac{1}{2}}}\right\}\cos kr.\,dr$$

where $R_c = 29{\cdot}98$ ohms

$l = \lambda/4$

λ = wavelength

ϕ = angle between dipoles

$k = 2\pi/\lambda$

The zero lower limit will be awkward when cosine integrals appear, and would have to be treated, following Murray, as the result of a limiting process. We can avoid this by rearranging the second term and writing the whole integral as

$$j\int_{-l}^{l} \frac{l}{r}\frac{e^{-jk(r^2 - 2rl\cos\phi + l^2)^{\frac{1}{2}}}}{(r^2 - 2lr\cos\phi + l^2)^{\frac{1}{2}}}\cos kr\,.\,dr$$

MS accepted by the Editor, February 1951

Writing the term $\cos kr$ in exponential form, we finally express $\alpha + j\beta$ as a sum of two integrals which, with suitable alterations of notation can be identified as I_1 and I_2 in Murray's paper. These have been evaluated by Murray with the help of suitable transformations, and we can use his solutions with the limits appropriate to the present problem. The algebra is straightforward but tedious and need not be given. The final result is:

$$\begin{aligned}2(\alpha + j\beta) = {} & \mathrm{Ci}(kA) - 2\mathrm{Ci}(kB) + 2\mathrm{Ci}(kC) \\ & - \mathrm{Ci}(kD) + \mathrm{Ci}(kE) - \mathrm{Ci}(kF) \\ & + j[\mathrm{Si}(kA) + 2\mathrm{Si}(kB) - 2\mathrm{Si}(kC) \\ & + \mathrm{Si}(kD) - \mathrm{Si}(kE) - \mathrm{Si}(kF)]\end{aligned}$$

where $\mathrm{Ci}(x) = -\int_x^\infty \frac{\cos x}{x}\,dx,$

$$\mathrm{Si}(x) = \int_0^x \frac{\sin x}{x}\,dx$$

$$A = l[2 - \sqrt{2}(1 - c)^{\frac{1}{2}}]$$

$$B = \sqrt{2}l(1 + c)^{\frac{1}{2}}$$

$$C = \sqrt{2}l(1 - c)^{\frac{1}{2}}$$

$$D = l[2 + \sqrt{2}(1 + c)^{\frac{1}{2}}]$$

$$E = l[2 + \sqrt{2}(1 - c)^{\frac{1}{2}}]$$

$$F = l[2 - \sqrt{2}(1 + c)^{\frac{1}{2}}]$$

$$c = \cos\phi$$

When ϕ approaches zero, the mutual impedance becomes

$$Z_m = R_c[\gamma + \log_e 4kl - \mathrm{Ci}(4kl) + j\{\mathrm{Si}(4kl) + 2\mathrm{Si}(2kl)\}]$$

where $\gamma = 0{\cdot}5772$ approx.

Values for α and β worked out from the expressions above, with the help of the W.P.A. Tables of Sine and Cosine Integrals,[4] differ from those in Table 1 of Chambers' paper by not more than one unit in the last place except when $\phi = 15°$, the present values being $\alpha = 1{\cdot}177$ and $\beta = 2{\cdot}139$.

2. Value of Mutual Reactance Between Coincident Dipoles

The reactive part of Z_m is plotted in Fig. 1 (Case II), together with mutual reactances when two half-wave rods are joined at their ends (this is Murray's case). It will be seen that when ϕ tends to zero, the two curves give quite different values (points A and C on the graph), and each is different from the value obtained when parallel rods are brought together (point B: this is also the value of the self-reactance of a half-wave infinitely-thin rod).

There can be little doubt that in a physically realizable case the points A, B and C must coincide: for consider two metallic rods, of small but finite thickness coated with a very thin layer of insulating material so that they may, in effect, touch physically but not electrically. If they are found to be parallel and as closely spaced as possible, each having its ends adjacent to ends of the other, it will not be possible by electrical measurements to discover whether their previous configuration was that of Cases I, II or III in Fig. 1 (supposing that they have been in their present situation for a substantial time).

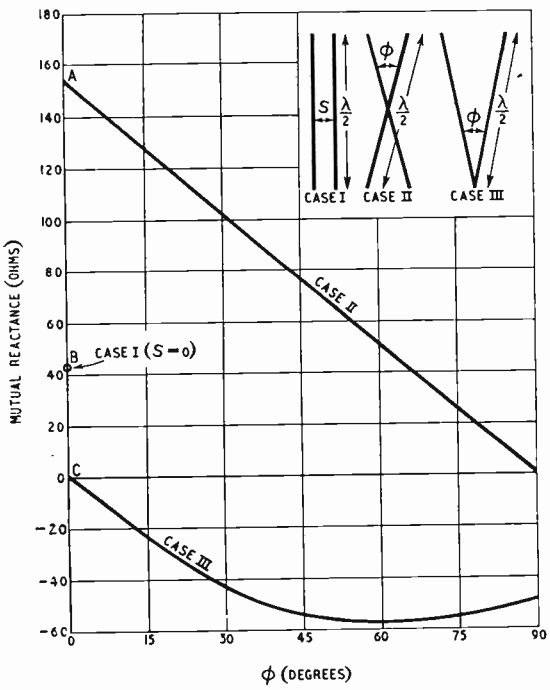

Fig. 1. *Mutual reactance of crossed dipoles hinged at their ends or their centres. The limiting value for parallel dipoles having zero spacing is shown at B.*

In other words, the measurable quantity known as the mutual reactance between two such rods in as close proximity as possible cannot depend on how they have arrived at this position.

Presumably, at least one of the simplifying assumptions involved in the theory has been too drastic. It is natural to suspect the assumption that the rods have zero thickness.

We shall have to consider the expression for the electric field at an arbitrary point R due to an infinitely-thin straight half-wave rod (PQ, in Fig. 2), having sinusoidal current distribution. This is given in ref. 2 (or in Stratton,[5] p. 457). In the notation already used, we have

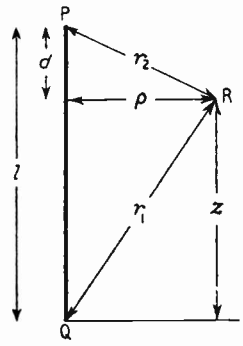

Fig. 2. *Co-ordinate system for a single dipole.*

$$E_z = -jR_cI\left[\frac{e^{-jkr_2}}{r_2} + \frac{e^{-jkr_1}}{r_1}\right]$$

$$E_\rho = jR_cI\left[\frac{e^{-jkr_2}}{r_2}\,\frac{(z-l)}{\rho} + \frac{e^{-jkr_1}}{r_1}\cdot\frac{z}{\rho}\right]$$

where z, l, r_2, r_1, ρ are defined in Fig. 2 and I is the current value at a current maximum.

If we let ρ go to zero, keeping d constant, E_z approaches some finite limit which does not here concern us. In the case of E_ρ we must consider two possibilities. If, when ρ approaches zero, R lies on QP produced, then

$$z \rightarrow l + d$$
$$r_2 \rightarrow d$$
$$r_1 \rightarrow z$$

$$\text{so } E_\rho \rightarrow jR_cI\left[\frac{e^{-jkr_2}}{\rho} + \frac{e^{-jkr_1}}{\rho}\right]$$

$$= R_cI\left[\frac{\sin(kr_2) + \sin(kr_1)}{\rho} + j\left\{\frac{\cos(kr_2) + \cos(kr_1)}{\rho}\right\}\right]$$

In the limit, $r_1 - r_2 = \lambda/2$

so $kr_1 - kr_2 = \pi$

$$\text{and } \left.\begin{aligned}\cos(kr_2) + \cos(kr_1) &= 0\\ \sin(kr_2) + \sin(kr_1) &= 0\end{aligned}\right\}$$

Thus when ρ approaches zero, both the terms in the expression for E_ρ become indeterminate. If we take ρ as small and work through the appropriate expansions, we can easily show that both terms become zero in the limit. That is to say, the component of the electric field at right angles to the rod is zero at all points on its axis external to it.

When R falls on PQ as ρ approaches zero the situation is different. Then,

$$z \rightarrow l - d$$

$$r_2 \rightarrow d$$

$$r_1 \rightarrow z$$

and $$E_\rho \rightarrow jR_cI\left[-\frac{e^{-jkr_2}}{\rho} + \frac{e^{-jkr_1}}{\rho}\right]$$

$$= R_cI\left[\frac{\sin(kr_1) - \sin(kr_2)}{\rho} + j\left\{\frac{\cos(kr_1) - \cos(kr_2)}{\rho}\right\}\right]$$

In the limit, $r_1 + r_2 = \lambda/2$

so $kr_1 + kr_2 = \pi$

and $$\left.\begin{aligned}\sin(kr_1) - \sin(kr_2) &= 0\\ \cos(kr_1) + \cos(kr_2) &= 0\end{aligned}\right\}$$

Therefore, the real portion of the expression for E_ρ becomes indeterminate and—as before—we can show that in the limit it is actually zero. It is apparent that the imaginary portion will in general become infinite in the limit.

Now the source of the anomaly under discussion becomes clear. The mutual impedance between two rods is obtained by integrating the product of the current on one and the component of the electric field tangential to it due to the other.[2] When the mutual impedance between parallel rods is evaluated, E_ρ is ignored, since it would not be expected to have a component along a rod at right angles to its own direction, and it is still ignored even when the distance between the rods is reduced to zero (or when the self-impedance is calculated: the mathematical process is the same). This is equivalent to saying that an infinite field is to be regarded as having no component at right angles to itself. The reason for adopting this attitude in the present situation is that we wish the infinitely-thin wire case to represent the limit of the finite thickness case—without a discontinuity when the diameter goes to zero.

When the rods are inclined at an angle ϕ, the component of E_ρ required in calculating the mutual impedance is, of course, $E_\rho \sin\phi$. Suppose the rods are rotatable round a pivot in such a way that they coincide when ϕ becomes zero (as in cases II and III of Fig. 1). As ϕ decreases, $\sin\phi$ approaches zero and, as we have seen, E_ρ approaches infinity. $E_\rho \sin\phi$ and, consequently, the calculated mutual impedance, will approach some limit whose value will depend on the way in which the position of coincidence is approached. Two such limits are A and B in Fig. 1.

The foregoing argument makes it clear that only the mutual reactance can show an anomaly of the type dealt with here, since the real part of E_ρ, approaches a non-infinite limit as ϕ approaches zero.

3. Conclusions

It seems that it is probably safe to use calculations based on thin-wire theory as a guide to performance in the practical case of aerial rods having finite diameter, when the rods are parallel (as, for example, in Walkinshaw's calculations on Yagi arrays[6]). For in such calculations E_ρ is ignored throughout, and in practice its component parallel to the coupled rod (due to possible slight accidental tilt) may be expected to be negligible.

However, in the case of crossed dipoles[1] or dipoles arranged as a V[3] it is quite unsafe to assume, as Chambers does, that "the mutual impedance between two such dipoles should not vary appreciably with their thickness." In fact, measured curves of reactance must depart sufficiently from the theoretical curves of Fig. 1 to meet on the $\phi = 0$ axis, and in view of the large values of E_ρ to be expected, the mutual reactance is likely to vary critically with diameter. The mutual resistance may well be much less sensitive to diameter changes.

REFERENCES

[1] Ll. G. Chambers. "Input Impedance of Two Crossed Dipoles." *Wireless Engineer*, July 1950, Vol. XXVII, p. 209.

[2] P. S. Carter. "Circuit Relations in Radiating Systems and Applications to Antenna Problems." *Proc. Inst. Radio Engrs*, June 1932, Vol. 20, p. 1004.

[3] F. H. Murray. "Mutual Impedance of Two Skew Antenna Wires." *Proc. Inst. Radio Engrs*, January 1933, Vol. 21, p. 154.

[4] "Tables of Sine, Cosine and Exponential Integrals": Vols. I and II. Federal Works Agency Work Projects Administration, New York, 1940.

[5] J. A. Stratton. "Electromagnetic Theory." McGraw-Hill, 1941.

[6] W. Walkinshaw. "Theoretical Treatment of Short Yagi Aerials." *J. Instn elect. Engrs*, Part IIIA, March-May 1946, Vol. 93, p. 598.

PREMIUMS FOR TECHNICAL WRITING

To encourage the writing of articles describing technical progress and development in Great Britain, the Radio Industry Council will award premiums of 25 guineas each, up to an average of six a year, to the writers of published articles which deserve to be commended by the industry.

Any non-professional writer of articles published in journals or periodicals available to the public from bookstalls or by subscription is eligible. Articles in trade or "house" journals, or those published by professional or learned societies, are debarred.

A panel of judges appointed by the R.I.C. will decide the awards, bearing broadly in mind the following criteria: Value of the article in making known British achievements in radio and electronics; originality of subject; technical interest; presentation and clarity.

Entries (accompanied by, if possible, five copies of the journal or proofs or reprints) may be sent to the Secretary, Radio Industry Council, 59 Russell Square, London, W.C.1.

AUTOMATIC ATMOSPHERICS-WAVEFORM RECORDER

By C. Clarke, Grad.I.E.E., and D. E. Mortimer, B.Sc.

(Communication from the National Physical Laboratory)

SUMMARY.—The paper describes equipment which has been developed to record photographically the changes in electric field constituting the atmospherics received from lightning discharges.

The amplifier is aperiodic, covering the frequency range 100 c/s to 100 kc/s and requires at maximum gain, a signal of 8 mV r.m.s. at the input grid, to give a full-scale deflection on a 6-in.cathode-ray tube. The waveform appears on two c.r. tubes simultaneously. Linear single-stroke time bases of short and long duration respectively are used to display, on one tube, the initial high-frequency portion of the discharge and, on the other the low-frequency 'tail' associated with distant atmospherics. The time bases are triggered by the atmospheric and are variable over the ranges 1 to 6 milliseconds and 4 to 30 milliseconds respectively. Brilliance modulation of the c.r. spot by a pulse from the time base makes the trace visible only for the duration of the sweep. A separate camera is used with each c.r. tube and the exposures are made on perforated 35-mm film. After each exposure, the film is automatically moved on to the next frame, 40 exposures per minute being possible.

Provision is made for synchronization with the Meteorological Office network of cathode-ray direction-finders so that the position of origin of each recorded atmospheric may be determined.

1. Introduction

IN 1923 Watt and Appleton published the first of a series of papers,[1] describing an inquiry into the nature and origin of atmospherics which was being conducted as part of the programme of the Radio Research Board. The records were obtained by observing the waveform on a cathode-ray tube and sketching the result from memory. Later, with the development of better cathode-ray tubes, more stable amplifiers and improved photographic materials, it was possible to photograph the waveform directly from the c.r.t.[2] Also the observations could be synchronized with direction-finder bearings from two or more stations which provided an indication of the position of origin of the atmospheric. By 1939 the technique was well advanced and useful results had been obtained by Lutkin,[3] Schonland[4] and others. The work in this country ceased shortly before this date because it was considered that sufficient information was available on long-wave propagation and because the Meteorological Office did not consider it to be necessary to use radio methods for the detection of thunderstorms.

Wartime conditions, however, caused a change in policy and it was decided to investigate further the fundamental properties of lightning discharges. By studying the various types of atmospheric waveforms it was hoped to obtain information on the current density and the variation of current with time in lightning flashes, and the modification of the original radiation as a result of propagation. These data are required to augment existing knowledge of the propagation of very-low-frequency waves and the noise levels likely to be encountered at frequencies below 100 kc/s, a part of the spectrum used for navigational aids.

Also what is unwanted noise to the radio engineer becomes a wanted signal to the meteorologist who is interested in locating thunderstorms by means of the signals radiated by lightning flashes. The ultimate objective is to be able to locate the storms by observations made from a single observing point instead of the base-line technique at present in operation by the British Meteorological Office,[5] and it was considered that to study the variation of waveform with distance was the first step towards this objective.

The equipment described in this paper has been designed to further these researches.

2. Basic Design Criteria

The basic requirements of the equipment were:

(i) An amplifier capable of amplifying linearly all important components of the energy received from a lightning flash.

(ii) A cathode-ray tube display capable of recording photographically both the initial high-frequency portion of the discharge and the low-frequency 'tail' associated with distant atmospherics.

(iii) A method of correlating the waveform records with the Meteorological Office thunderstorm-location service in order to determine the position of origin of the atmospheric.

In addition, it was considered desirable that the equipment should be capable of operating automatically at predetermined intervals for periods up to 48 hours.

Requirement (i) determines the bandwidth of the amplifier and after a careful study of the

MS accepted by the Editor, February 1951

records of other workers, the approximate limits of 100 c/s to 100 kc/s were chosen. To maintain the frequency response over this band it is necessary to use an aperiodic aerial system and either the time constant of the input circuit may be made large compared with the period at the lower-frequency limit or alternatively the input (E) may be differentiated by making the time constant short compared with the period at the highest frequency to be amplified. This latter course will result in a dE/dt record which must be integrated graphically to obtain a true picture of the field change at the aerial. This is a difficult operation and, although for some applications the dE/dt waveform may be used directly, it inevitably presents a more complex picture than a direct record of E because the amplitudes of the higher-frequency components are enhanced. Also, as the number of interfering stations increases with increasing frequency, there is, in effect, a reduction in the ratio of the wanted to unwanted signals. For these reasons it was decided to use a long time-constant input circuit and thus to record directly the field change at the aerial.

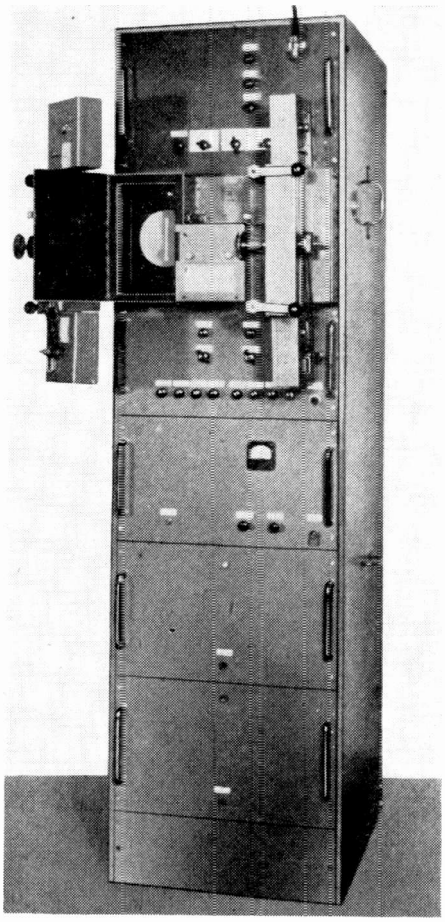

Fig. 1. *Atmospherics-waveform recorder.*

An aerial system having a very high capacitance would be too large to be practicable; nor is such an aerial necessary in view of the high field strengths radiated by atmospherics. Hence, the time constant is made high by using a very high grid leak across a cathode-follower input stage. The cathode follower has several advantages: (1) it will accept large grid swings without overloading; (2) it has a high input impedance, the resistive component at the low-frequency end of the spectrum being large compared with the value of the grid leak (100 megohms); (3) a low-impedance attenuator may be used in the cathode circuit, the attenuation of which is relatively independent of frequency.

One method of satisfying requirement (ii) is by using a c.r. tube display in which the spot excursion depends upon the amplitude of the received signal and by recording on continuously-moving film, such as in the drum type of camera. An alternative method is used in the present equipment in which the waveform is displayed along a single-sweep time base and the result photographed on stationary film. This is the more flexible arrangement since each atmospheric which is recorded can be made to advance the film one frame, enabling the equipment to operate unattended without wasting film. In order to record the initial and final portions of the discharge two separate displays are used, one having a fast sweep and one a slow sweep, both being initiated by the same trigger pulse, generated from the incoming atmospheric.

To satisfy requirement (iii) correlation with the Meteorological Office network of direction finders is obtained either directly or through the medium of a cathode-ray direction finder associated with the waveform recorder.

Finally, provision is made for automatic operation, when desired, by the inclusion of a time switch.

3. Principle of Operation

A photograph of the recorder appears in Fig. 1 and a block schematic diagram in Fig. 2.

Voltage changes induced in a vertical single-wire aerial by atmospheric disturbances are amplified by an aperiodic amplifier, the output of which is connected to the deflector plates of two cathode-ray tubes so as to produce horizontal deflections of the spots. The signal may be delayed, if required, for 67 microseconds, by an artificial line in the amplifier. A trigger signal is obtained from the stage immediately preceding the delay line and operates the trigger-pulse generator which produces two pulses of opposite polarities. The negative pulse triggers two single-

stroke time bases and, simultaneously, the positive pulse sets the camera-control unit in operation. Each time base generates a sweep voltage producing a downwards excursion of the spot on the c.r. tube to which it is connected. The lengths of these sweeps are kept constant but their durations are variable in steps over the ranges 1 to 6 milliseconds and 4 to 30 milliseconds respectively, and the atmospheric waveform can therefore be displayed on two different time scales simultaneously.

Insertion of the delay line ensures that the particular portion of the atmospheric which triggers the equipment is delayed until the time-base sweeps have commenced. However, the first part of the waveform will still not be recorded should it consist of voltage fluctuations of a lesser magnitude than the trigger level at which the trigger-pulse generator is set at that time. Brilliance-modulation pulses, derived from each time base make the c.r. tube traces visible for the periods of the sweep only, thus removing the need for a camera shutter.

The following sequence of operations is performed by the camera-control unit upon receipt of the appropriate trigger pulse. First, a data card and a counter showing the serial number, which are mounted beside the face of each c.r. tube are illuminated for a fraction of a second, thus being photographed on the same frame as the waveform trace. Then the counter number changes by unity, and lastly each film is moved on to the next frame. The counter-operating and brilliance-modulation pulses may also be used, in a way to be described later, to synchronize the waveform recorder with cathode-ray direction-finding equipment.

An asymmetrical multivibrator in the trigger-pulse generator prevents any further atmospherics from operating the recorder for a short period after each waveform has been recorded, this period being sufficient for the camera motor to advance the film to the next frame.

The output from a crystal-controlled oscillator may be injected into the amplifier when required, and a few traces photographed showing calibrated time-base sweeps. These frames are useful for preparing an appropriate time scale when analyzing the records.

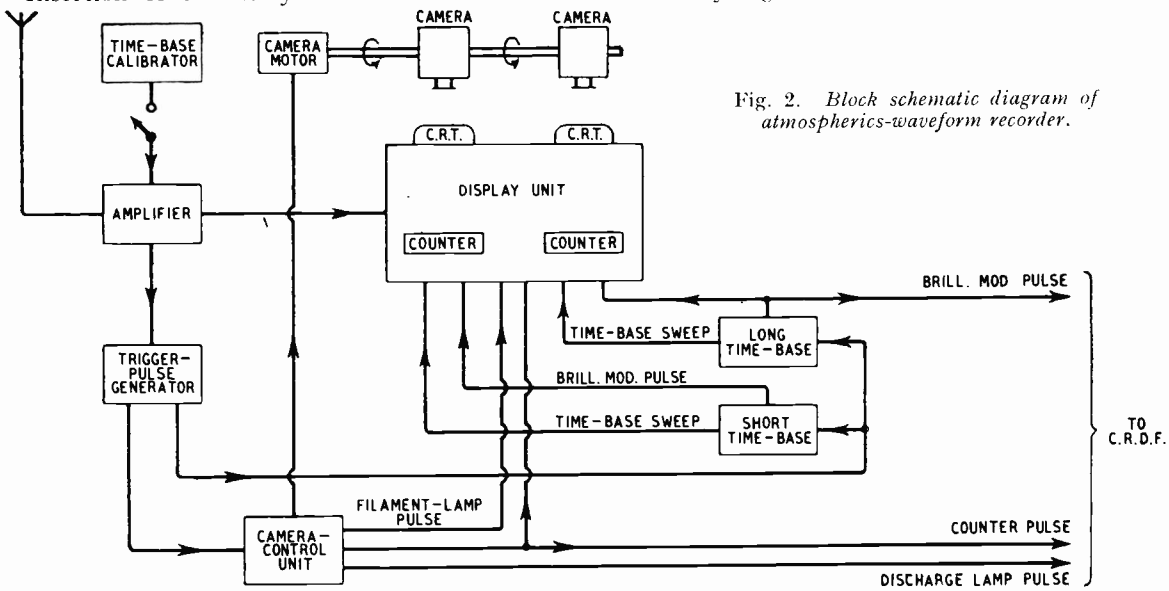

Fig. 2. *Block schematic diagram of atmospherics-waveform recorder.*

4. Detailed Description

4.1. *Aerial System*

The aerial is a vertical wire 10 metres long. It is well insulated from earth and is connected at its lower end to the amplifier by a concentric cable 5 metres long. The outer conductor of this cable is earthed at the amplifier end to reduce pick-up from the a.c. mains supply, the radiated field from which may be very strong in the immediate neighbourhood of the equipment. The capacitance of the lead-in cable (250 pF) in relation to the aerial (150 pF) reduces the signal voltage available at the amplifier input terminal, but increases the time constant of the aerial circuit to more than 40 milliseconds, which is the value required to produce a satisfactory response at the lower frequency limit of the amplifier pass-band.

4.2. *The Amplifier*

For the reasons set out in Section 2, the input stage of the amplifier circuit (Fig. 3) is a cathode follower with a large time-constant grid circuit,

the aerial being connected to ground by a 100-megohm resistor R_1.

To cancel the unwanted mains hum picked up by the aerial, an alternating voltage derived from the a.c. mains and adjustable in phase and amplitude is injected across a small resistor at the earthy end of R_1. The phase-shift network is of the conventional bridge type using resistive and capacitive elements and giving a 360° coverage. To minimize internally-generated hum, the heater supply of the amplifier is balanced with respect to earth.

combined carriers producing a deflection on the c.r. tube screen equivalent to that produced by a single signal at the grid of V_1 of 8 mV r.m.s. (measured at 10 kc/s). A 40% reduction of this equivalent voltage may be effected by rejecting the carrier of GBR on 16 kc/s when operating the recorder about 80 miles from Rugby. A bridged-T filter[6] tuned to 16 kc/s can be inserted for this purpose, by the switch S_1, into the circuit between V_2 and V_3. The filter has an insertion loss at resonance greater than 50 db, but the absorption band is narrow and the phase disturbance at

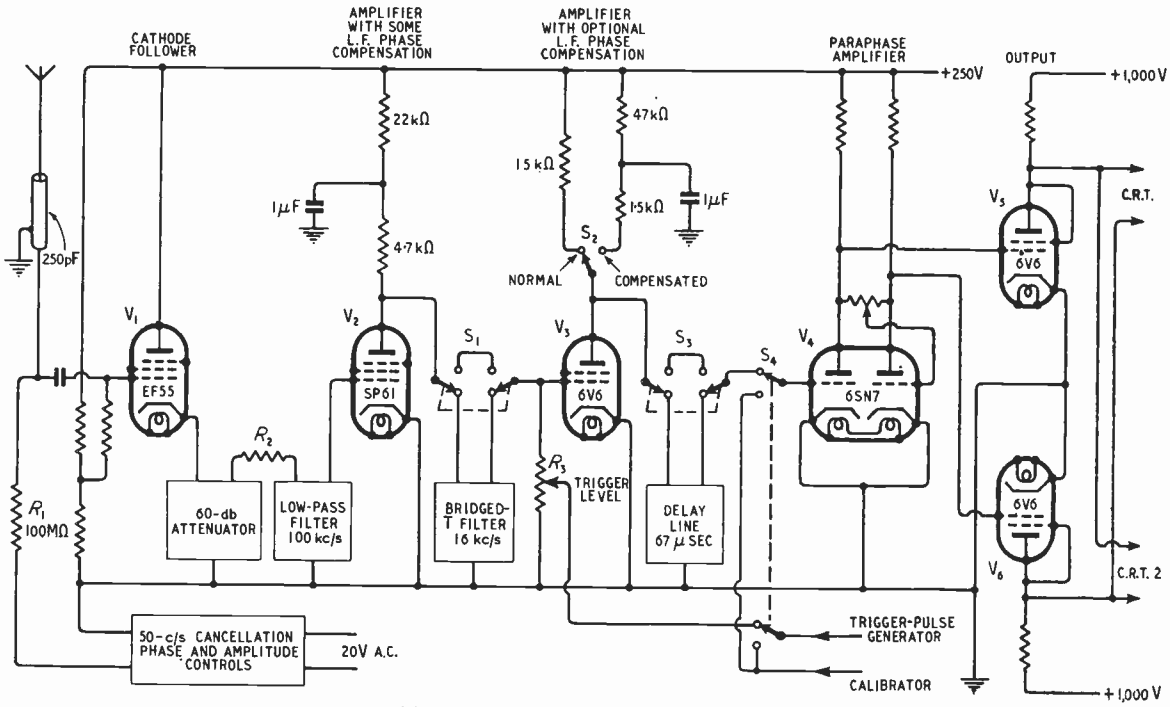

Fig. 3. *Simplified circuit of amplifier.*

The overall gain of the amplifier is controlled by a 2,000-ohm resistance potentiometer forming the load of the cathode follower. A multi-position switch enables the appropriate tapping on the potentiometer to be selected and a maximum attenuation of 60 db may be inserted in steps of 6 db.

The attenuator is connected to a low-pass filter through a resistor R_2 of 10,000 ohms. The filter has a characteristic impedance of 10,000 ohms and consists of a single T section terminated by m-derived half sections with $m = 0{\cdot}6$. It is used to limit the amplifier pass-band to 100 kc/s as above this frequency carrier interference becomes serious because of the increased number of transmitting stations, and also the energy present in atmospherics becomes small.

Appreciable carrier interference is also experienced within the pass-band of the amplifier, the

1 kc/s on either side of resonance is theoretically less than 10°. It is not practicable to deal with the remaining carriers in the same way as the number of filters required would seriously disturb the gain and phase characteristics of the amplifier.

To improve the overall phase response at low frequencies, phase compensation is introduced in the second and third stages by suitably chosen values of anode load and decoupling components.[7] This avoids the need for long time constants in the interstage couplings which would otherwise be required to keep the phase shift small at the lower limit of the frequency band. It results, however, in a considerable reduction in overall gain and for this reason, the main compensation is optional and may be introduced by switch S_2 in the anode circuit of V_3.

The 67-microseconds delay line of characteristic impedance 8,000 ohms may be inserted

when required between V_3 and V_4 by switch S_3. It consists of 33 T sections, properly terminated, and the theoretical cut-off frequency is sufficiently high (170 kc/s) for the insertion loss to be small over the amplifier pass-band. The loss is 1·5 db at 10 kc/s and increases to 5·5 db at 85 kc/s.

A paraphase amplifier V_4 drives a push-pull output stage. An undistorted output of 500 V peak-to-peak may be delivered to the c.r. tube deflection plates.

4.3. *Trigger-pulse Generator*

The purpose of the trigger-pulse generator (Fig. 4) is to produce suitable pulses for operating the time bases and camera-control unit when it is itself triggered by an atmospheric signal obtained from the grid circuit of V_3 in the amplifier (Fig. 3). The amplitude of this atmospheric signal may be adjusted by the potentiometer R_3. The voltage excursion at the grid of V_3, and therefore the spot deflection on the c.r. tube, which must be exceeded before the unit triggers, may thus be set to any desired value independent of the gain of the amplifier. The trigger signal must be obtained from the amplifier at the stage immediately preceding the delay line, and further amplification is needed (V_7 in Fig. 4) to give a lower limit for the trigger level of 1/20 full-scale deflection on the c.r. tube.

A paraphase amplifier V_8 followed by a double diode in a full-wave rectifier circuit ensures that whatever the polarity of the first half-cycle of the incoming atmospheric, it appears at the first grid of the flip-flop circuit V_{10}, as a positive impulse. The flip-flop triggers, therefore, as soon as the amplitude of the atmospheric reaches the required value, whether positive or negative. Large negative and positive pulses developed at the two anodes of V_{10} are then available for triggering the time bases and camera-control unit respectively. The rectangular negative pulse is differentiated and then amplified in V_{11} before triggering the time bases.

Until the flip-flop resets, no trigger pulse can be derived from further atmospherics, and so after each operation, the equipment has a quiescent period which can be adjusted to exceed slightly the time taken by the camera motor to move the film on to the next frame—approximately $1\frac{1}{2}$ seconds. A milliammeter in one of the anode circuits of the flip-flop provides a useful indication of the duration of this quiescent period.

4.4. *Time Base*

The time base used is the sanatron circuit which provides a linear single-stroke sweep. The sweep voltage may be made comparable to the line voltage, and the circuit also provides a rectangular pulse of large amplitude, having precisely the same duration as the sweep, which can be used for brilliance-modulation of the c.r. tube trace.

A full description of the circuit has been published elsewhere,[8] and a brief account only will be given here. In the circuit of Fig. 5, V_{15}, a pentode with high mutual conductance, forms part of a Miller integrator circuit and is normally cut off by a large negative bias voltage on its

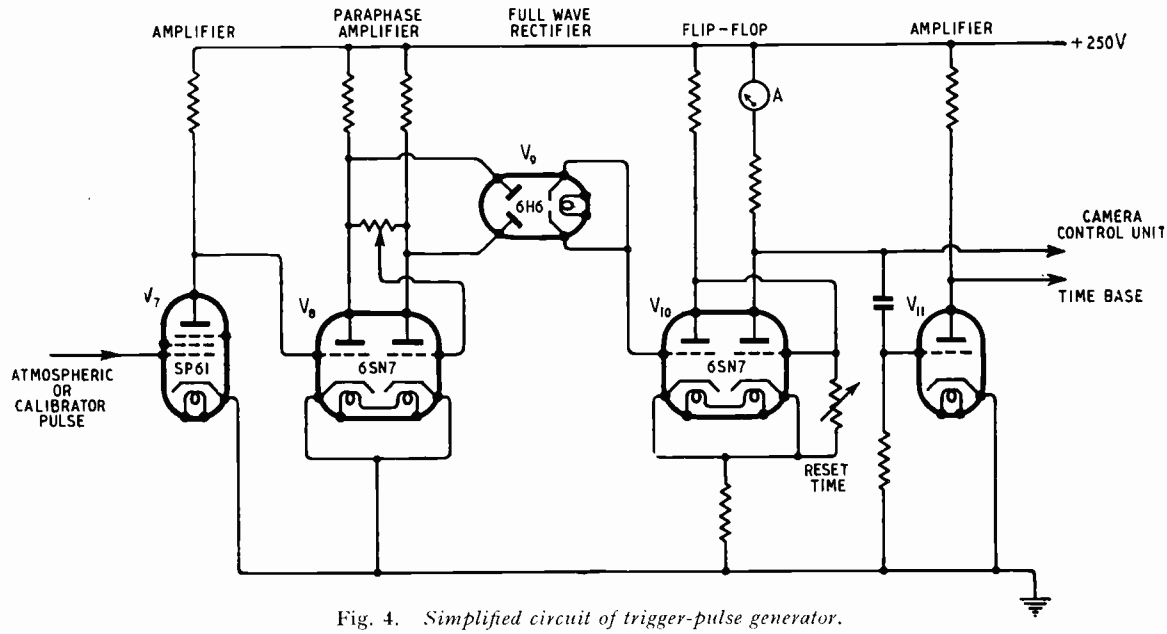

Fig. 4. *Simplified circuit of trigger-pulse generator.*

suppressor grid. This bias is controlled by a similar valve V_{13}, the two valves being arranged in the form of a multivibrator having a stable and a semi-stable state. In the stable or quiescent state, V_{15} is biased beyond cut-off; the semi-stable state has the duration of the linear discharge of the capacitor C_1. The diode V_{14} prevents the suppressor grid of V_{15} becoming positive and the voltage change at this suppressor grid during the semi-stable state is used for brilliance-modulation of the c.r. tube sweep.

The sequence of operations is initiated by a negative pulse applied to the cathode of one of the diodes V_{12}. This valve ensures that positive input pulses are rejected and limits the voltage excursion of the grid of V_{13} to just beyond the value for cut-off for the duration of the semi-stable state. The duration of the sweep is controlled by the variable resistance R_4.

The sweep voltage available is transformed into a push-pull output of twice the amplitude by coupling V_{15} to a similar valve V_{16} in a paraphase circuit such that the anode-voltage swings on the two valves are complementary. As an alternative to the normal time-base voltage, a small a.c. voltage may be fed to the grid of V_{16} via the change-over switch S_5. If the c.r. tube brilliance control is then advanced until the spot is visible, a continuous sinusoidal sweep appears on the c.r. tube screen and facilitates the adjustment of the amplitude and phase controls for cancellation of the mains interference picked up by the aerial.

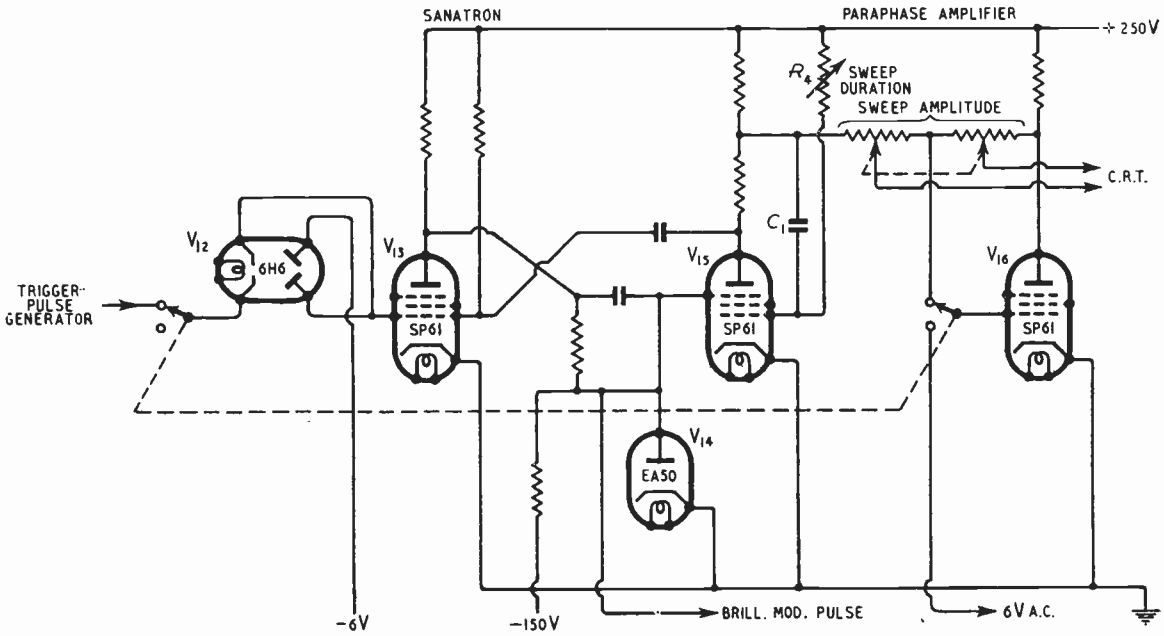

Fig. 5. *Simplified time-base circuit.*

4.5. *Camera-control Unit*

Upon receipt of the positive trigger pulse from the trigger-pulse generator, the camera-control unit closes the various circuits for photographing the frame serial number and for winding the film on to the next frame.

The incoming positive pulse fires the thyratron (V_{20} in Fig. 6) and relay A/2* becomes energized. This causes the change-over contact A_2 to complete the circuit discharging capacitor C_2 through relay B/4, which is therefore momentarily energized. At the same time contact A_1 completes the circuit energizing the resistance-slugged relay C/1, but before the latter relay can operate mechanically the circuit is again broken by the opening of the contact B_1 due to the momentary operation of relay B/4.

Relay B/4 remains in the energized position until the capacitor C_2 has discharged, approximately 0·2 second. For this period, its three remaining contacts complete the following lamp and counter circuits. The closing of contact B_2 switches on lamps illuminating the data cards and counters and so causes the information they show to be registered on the film alongside the corresponding waveform. At the same time, the counters are energized by the closing of contact B_3, but as they are of the type which do not operate until the current ceases, their numeral drums do not move until the exposure is over. Lastly, the change-over of contact B_4 discharges

* Relay nomenclature is in accordance with the 'detached contact' system described in British Standard Graphical Symbols for Telecommunications, BS.530 : 1948.

capacitor C_3 through a small mercury-discharge lamp in the c.r.d.f. camera, when in use, which illuminates the counter there.

Upon the return of relay B/4 to its normal unenergized position, the contact B_1 again closes and this time the relay C/1 becomes fully energized, closing the heavy-duty contact C_1, and energizing one winding of a capacitor-type induction motor driving the cameras. The other winding of the motor is permanently energized to provide electromagnetic braking on the rotor at the end of the duty cycle. A contact D_1 opened by a cam D/2 every quarter-revolution of the motor shaft determines the duration of this duty cycle by momentarily breaking the h.t. supply to the thyratron and so quenching the current through it. Relays A/2 and then C/1 return to their unenergized states, thus interrupting the supply to the motor, which therefore comes to rest, having moved the film one frame. Another contact D_2 is closed by the cam D/2 in unison with the opening of D_1 and keeps the motor energized until the cam stud is clear of D_1 so that the thyratron anode circuit is again completed. The unit is then ready to operate again upon arrival of the next atmospheric-derived trigger pulse.

4.6. *Time-base Calibrator*

It is an advantage to be able to display occasionally the output of a pulse generator in place of the atmospheric waveforms, for the purpose of calibrating the time base. The output of such an oscillator may be injected into the later stages of the amplifier by means of the switch S_4 in Fig. 3.

Pulses at 20-microsecond intervals are generated by a blocking oscillator V_{18A} (Fig. 7) which is locked to a crystal-controlled 50-kc/s oscillator V_{17}. Two other blocking oscillators V_{18B} and V_{19A}, synchronized by these 20-microsecond pulses, generate further pulse trains with intervals of 100 microseconds and 1 millisecond. The various trains are distinguishable on the display by their different amplitudes; the 1-millisecond pulses are larger and trigger the time bases so that each sweep commences on a millisecond pulse.

A few traces showing calibrated sweeps may thus be photographed when desired from both c.r. tubes simultaneously, although at the slower sweep speeds only the 1-millisecond pulses are resolved.

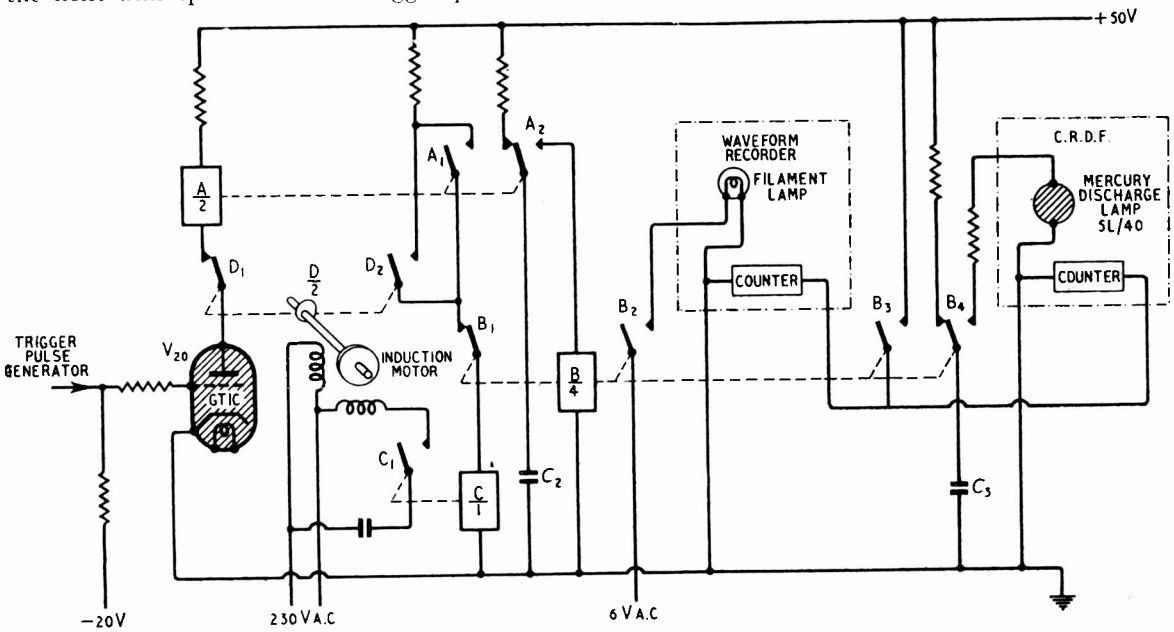

Fig. 6. *Simplified circuit of camera-control unit.*

Whenever possible, the various contacts are suppressed. However, the time-base sweeps are completed before the operation of the camera-control unit and as the trigger-pulse generator then becomes insensitive, there is no danger of the equipment recording radio interference which it has itself generated.

4.7. *Mechanical Construction and Display Unit.*

The complete equipment is contained in a frame measuring 6 ft high, 2 ft deep, and 20 in. wide (Fig. 1). The two 6-in. (16-cm) diameter c.r. tubes, the cameras and the camera-drive motor, which together form the display unit, are mounted directly on to one of the sections of the

frame, but the rest of the apparatus is distributed between five separate chassis. Starting with the top chassis the various units already described are distributed as follows:—

Chassis 1—Amplifier and time-base calibrator
Chassis 2—Camera-control unit and c.r.-tube circuits
Chassis 3—Time bases and trigger-pulse generator
Chassis 4—E.H.T. power pack for the c.r. tubes
Chassis 5—Main power pack.

The display unit is situated between the first two chassis. The two cameras are hinged vertically and when in the operating position form the lids of light-tight enclosures surrounding the c.r.-tube faces. For visual work, or when setting up the controls, the cameras may be swung clear to allow access to the c.r.-tube faces. The cameras may be used separately or together, a gear wheel on each camera driving-shaft meshing with its corresponding gear wheel on the shaft of the camera motor, located between the two c.r. tubes, as the camera is moved into the operating position. 35-mm perforated film is used and the cameras have detachable loading and take-up cassettes capable of holding 200 ft (60 metres) of film. The camera lenses have apertures of $f/1{\cdot}9$ and focal lengths of 1 in. (2·5 cm) and the image obtained is 1/9 full size. Eight exposures are made per foot (30 cm) of film and the equipment has a maximum rate of operation of 40 frames per minute.

5. Performance

5.1. *Amplifier*

The performance of the equipment is largely governed by the characteristics of the amplifier, the most important being the linearity and the variation of phase shift and gain as a function of frequency.

At maximum gain the amplifier requires 8 mV r.m.s. at the input grid to produce a full-scale trace on the c.r. tube, although in general it is not possible to use this gain due to interference from transmitting stations. However, the field strengths of atmospherics are very large and the amplifier gain can generally be reduced by 20 or 30 db; in practice satisfactory recordings

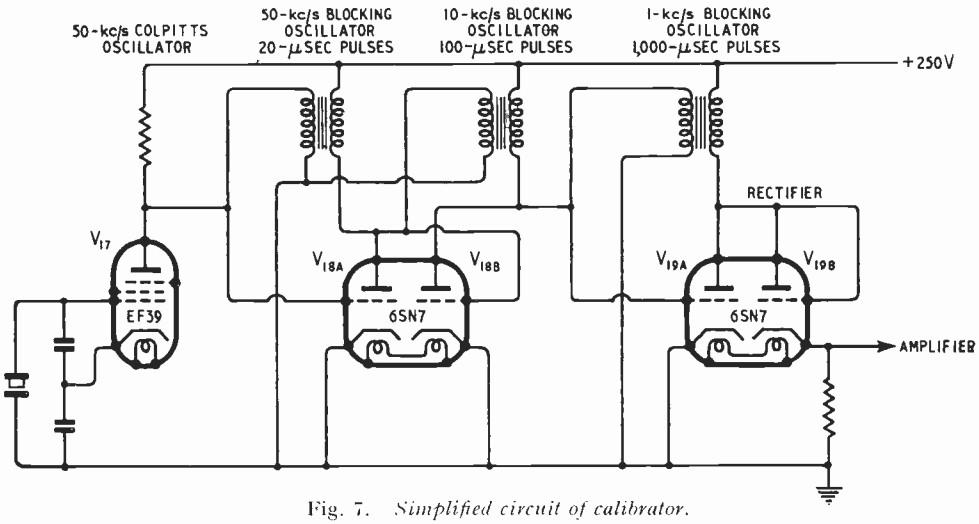

Fig. 7. *Simplified circuit of calibrator.*

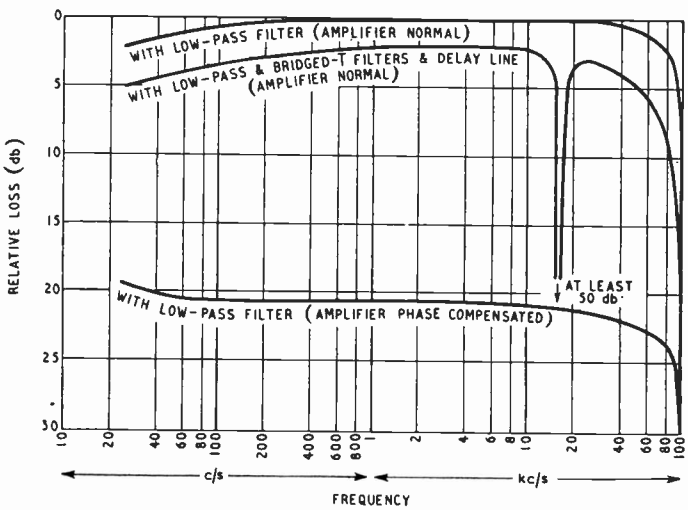

Fig. 8. *Gain/frequency characteristics of amplifier.*

have been made of atmospherics at ranges up to 2,000 km without excessive station interference.

At maximum attenuation, the output voltage follows the input voltage to an accuracy of 1% for signals up to 14 V r.m.s. at the input grid, corresponding to approximately twice full-scale deflection of the cathode-ray tube. (Full-scale deflection is defined as 10 cm on the 16-cm diameter tube.)

The amplitude-frequency characteristics are given in Fig. 8. The upper curve represents the amplifier with low-pass filter, while the middle curve shows the effect of adding to this the bridged-T (GBR) filter and delay line. The first curve shows a drop of less than 1 db from the maximum between 100 c/s and 50 kc/s and a drop of 2·5 db at 85 kc/s.

The lower curve shows the effect of the low-frequency phase compensation networks on the amplitude characteristic. At frequencies above 10 kc/s the characteristic is similar to the upper curve, but below 10 kc/s the characteristic rises steadily with decreasing frequency. There is an overall reduction of 20 db in gain and consequently the amplifier overloads at a lower output level. This loss is a disadvantage, although the use of the low-frequency compensation gives considerable improvement in the phase characteristic, as may be seen from an examination of the response to a square-wave input as illustrated in Fig. 9. Oscillograms are shown of the output from the amplifier, with the low-pass filter, bridged-T filter and delay line in circuit for inputs of equal on-off square waves at a repetition frequency of 200 c/s in the (a) normal and (b) compensated conditions. The use of compensation results in considerably more faithful reproduction of the square waves. The oscillation visible on the leading edge is due to shock excitation of the filters and the delay line and is not a function of compensation. Fig. 10, taken at a fundamental frequency of 10 kc/s, shows (a) the output from the normal amplifier, low-pass filter and delay line, and (b) the effect of adding the GBR filter. The wave train visible on this latter oscillogram is at a frequency of 16 kc/s, the resonant frequency of the filter.

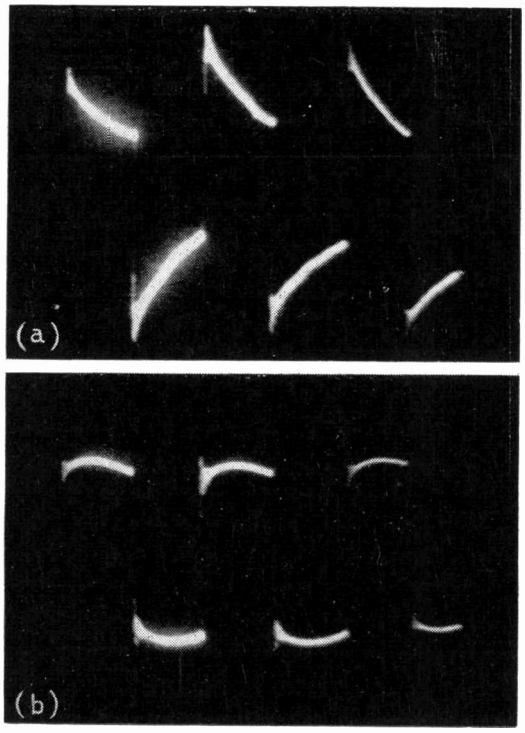

Fig. 9. *200-c/s square-wave oscillograms, (a) response of normal amplifier; (b) response of compensated amplifier.*

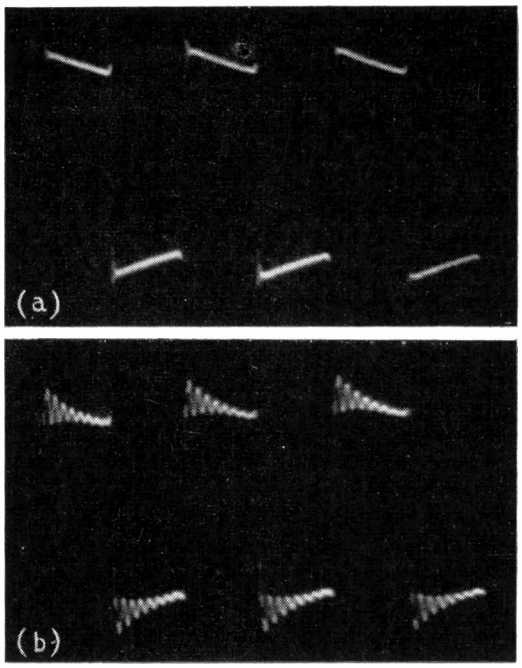

Fig. 10. *1-kc/s square-wave oscillograms; (a) response of normal amplifier with low-pass filter and delay lines in circuit, (b) as (a) with addition of bridged-T filter.*

The loss of energy due to the GBR filter is small considered in relation to the total energy contained in the atmospheric and there is no evidence so far of any of the waveforms being appreciably modified as a result of its use. Some modification, however, would be bound to occur if the main energy component contained in the atmospheric were in the neighbourhood of 16 kc/s.

5.2. *Time Bases*

The sweep durations are adjustable between 1 and 6 milliseconds (time-base A), and 4 and 30

milliseconds (time-base B). The time-base sweeps depart somewhat from linearity on the records, at the beginnings and ends of the traces, due largely to the curvature of the tube screen and the proximity of the camera lens. Corrections for these effects are derived from the photographic records displaying calibrator pulses.

6. Method of Operation

To operate the recorder it is necessary to adjust the cancellation of the 50-c/s pick-up on the main amplifier and to set the gain and trigger levels to the required values; the actual recording process then proceeds unattended until the equipment is switched off. Provision is made for switching the recorder on and off to any desired programme by a time switch.

The main difficulty with this automatic control has been the need for frequent adjustment of the 50-c/s neutralizing voltage when operating the equipment at high-gain levels in a laboratory where there are several mains-supply circuits. The difficulty could no doubt be overcome by housing the recorder in a building well removed from other mains equipment and operating from either a local generator or at the end of a branch to the supply mains. At normal gain settings, however, even in the laboratory, the neutralizing remains constant for many hours. It is, however, never perfect, as the harmonic content of the neutralizing voltage is different from that of the unwanted signal picked up by the aerial.

When the equipment is left unattended for several sets of records, the calibrator is switched on automatically for a short period at the beginning of each run to provide a few frames of calibrator pulses. These calibrated time-base records, besides giving frequent checks on the sweep linearity, also serve to separate the runs from one another and so assist in subsequent identification. Provision is also made for the equipment automatically to switch off should the supply of film become exhausted or in the unlikely event of one of the cameras becoming jammed.

7. Correlation of Waveform Records with the Position of Atmospherics Located by the Meteorological Office

To obtain independent observations of the positions of atmospheric sources, it is necessary to correlate the waveform records with the Meteorological Office thunderstorm location service, either directly or through the medium of an auxiliary cathode-ray direction finder associated with the recorder.

7.1. *The Meteorological Office Storm Location Service*

The Meteorological Office operates a network of four c.r.d.f. stations which locate thunderstorms by taking simultaneous bearings on the radiation from lightning flashes.[9] The stations are situated at Dunstable (Bedfordshire), Camborne (Cornwall), Irvinestown (N. Ireland) and Leuchars (Scotland), and operate for a 10-minute period every hour from 0600 to 2100 G.M.T. The equipments used are similar to the type described by Adcock & Clarke[10] and the bearings are normally taken

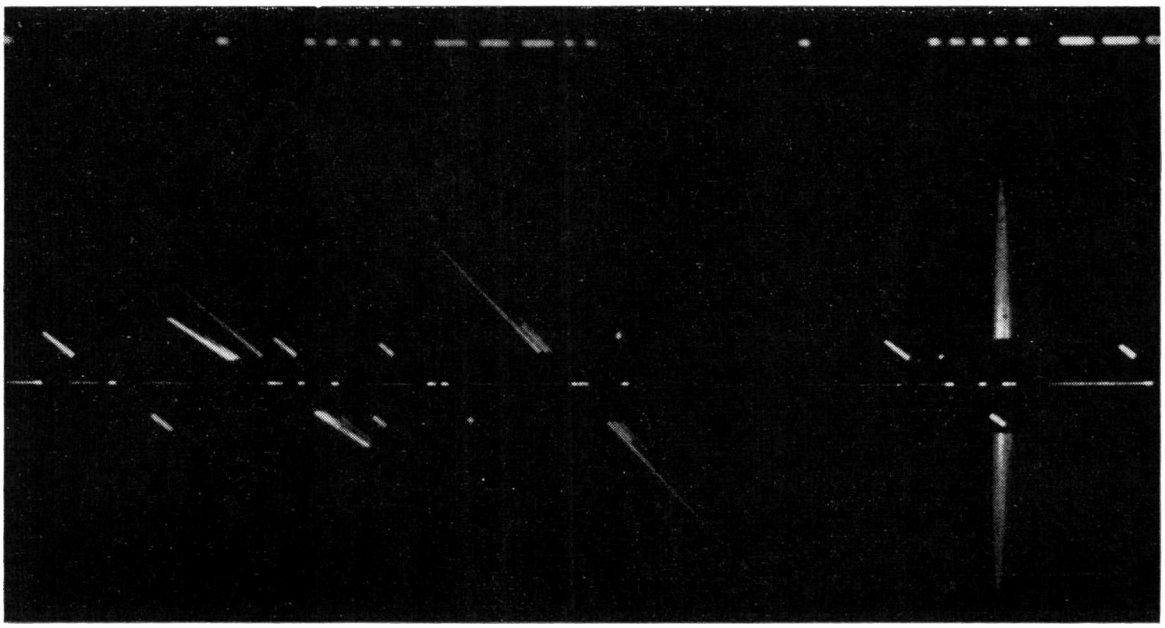

Fig. 11. *Typical C.R.D.F. record.*

visually. The tube in the quiescent condition is biased to cut-off and atmospherics received having any amplitude greater than a given threshold value are used to trigger a brilliance modulator which decreases the bias voltage on the c.r. tube and so makes the traces visible. A rotating cursor, calibrated in degrees, is fitted in front of the c.r. tube and the bearings are measured by rotating this cursor until a fiduciary line lies along the trace on the screen.

To synchronize the results of the four stations, they are linked by private telephone lines and correlation is obtained by one of the stations acting as a control centre. This is usually Dunstable and the operator there watches his c.r. tube and when a suitable trace appears he calls "Then." This is the signal for the outstations to call back the bearings of that particular flash in a set order, and by plotting these results on a suitable chart the position of origin of the atmospheric is obtained.

For experimental purposes, photographic recording may be used. To do this the rotating cursor is replaced by a shutterless 35-mm camera in which the film is moved continuously past the c.r. tube at a rate of about 20 cm per minute. A typical record is shown in Fig. 11. Brilliance modulation of the display is used, as for visual observation, but the c.r.-tube bias is set just above cut-off so that there is a residual spot which traces the line down the centre of the record. This line is used as a reference when measuring the bearings from the film record. To correlate the records from the four stations, a series of morse signals is sent over the telephone lines by means of an oscillator and auto-head at Dunstable. The signals are amplified at the outstations and operate a neon lamp built into each camera which gives a synchronizing code along the edge of the films.

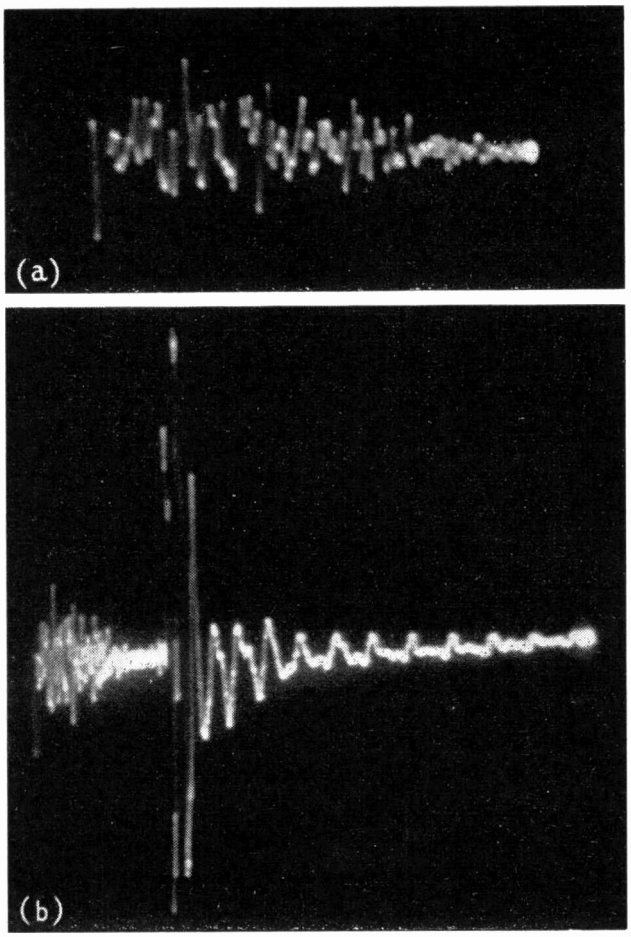

Fig. 12. *(a) Precursor or stepped leader discharge on short time base (1·6 msec); (b) same atmospheric on long time base (7 msec) showing echo-type return stroke.*

7.2. *Methods of Synchronization with Directional Observations*

Two methods of correlating the Meteorological Office locations of individual flashes with the waveform recorder have been used. The simplest and possibly the most satisfactory is to work directly with the network when routine visual observations are in progress. The waveform recorder is operated as fifth station in the network and when the control station 'calls' a flash which has triggered the waveform recorder, the appropriate counter number is passed to Dunstable where it is recorded with the outstation bearings for that particular atmospheric.

The other method is photographic and gives more precise information, but is complex in operation. A cathode-ray direction-finder is coupled to the waveform equipment and operated in conjunction with the Meteorological Office network of stations using photographic recording. The display unit of this c.r.d.f. is modified in two respects. First, the c.r. tube is brilliance-modulated directly from the waveform recorder so that the only traces appearing on the film are those of atmospherics photographed by the waveform recorder. Secondly, a counter, similar to those in the recorder, is built into the camera together with a small mercury-discharge lamp (see Fig. 6) so that numbers corresponding to the frame numbers on the waveform films are printed opposite the c.r.d.f. bearings. In addition, the Dunstable synchronizing code appears on the side

of the film, as in the Meteorological Office records, so that the bearings from all five stations may be correlated.

The disadvantages of this system are that it involves special runs on the part of the Meteorological Office and a rather tedious analysis before the final locations are obtained. The main advantages are that some indication of the character of the radiation may be obtained from the c.r.d.f. record, such as polarization and whether it originated from a multiple type of flash; also the observer errors are largely eliminated which should result in more accurate position location.

8. Presentation and Analysis of Records

After processing, the waveform recorder and c.r.d.f. films are projected for measurement by means of a viewing desk. This consists of a vertical enlarger giving a 9 times magnification, which projects downwards on to a surface-silvered mirror and then up to the lower surface of a flashed opal viewing screen which is viewed from above. Measurements on this magnified image may then be made without the operator obstructing the path of the projected image.

For analysis of waveform records, a time scale, derived from the calibrated time-base sweeps, may be superimposed on the image. For angular measurements of the c.r.d.f. records, the opal screen is replaced by a ground Perspex screen on which is mounted a rotating cursor, similar to that used on the c.r.d.f. display units.

8.1. *Typical Records*

Some records are shown in Figs. 12 and 13.

12 (a) Time of sweep 1·5 milliseconds. A precursor showing the characteristic high-frequency radiation due to the stepped leader discharge.

12 (b) Time of sweep 7 milliseconds. A precursor followed by an 'echo'-type waveform caused by multiple ionospheric reflections. A typical summer night record distant about 1,000 kilometres. This distance may be derived from the time intervals between successive echoes.

13 (a) Time of sweep 1·5 milliseconds. A damped low-frequency oscillation showing an exponential decay; a very distant atmospheric.

13 (b) A calibrated time-base sweep showing the 1 millisecond and 100 microsecond marks. The first millisecond pulse which triggered the time sweep occurred before the start of the record and consequently is not visible.

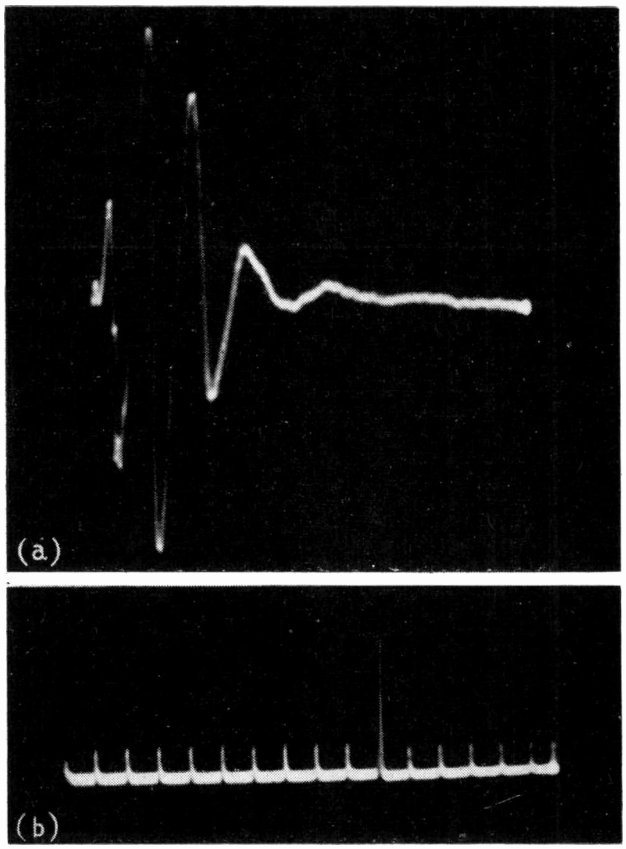

Fig. 13. *(a) Very distant atmospheric, sweep duration 1·6 msec; (b) calibrated sweep 1·6-msec duration.*

The records illustrated may be taken as typical of the results obtainable from the waveform recorder. No attempt will be made here to discuss the analysis of these results as this will be the subject of a further paper.

Acknowledgments

The work described above was carried out as part of the programme of the Radio Research Board. This paper is published by permission of the Director of the National Physical Laboratory, and the Director of Radio Research of the Department of Scientific and Industrial Research. The authors wish to acknowledge the contribution of Dr. H. G. Hopkins who directed the initial development and Mr. P. H. Harris who collaborated in the design in its early stages.

REFERENCES

[1] Watt, R. A. W., and Appleton, E. V., "On the Nature of Atmospherics I," *Proc. Roy. Soc.*, 1923, Vol. 103, p. 84.

[2] Appleton, E. V., and Chapman, F. W., "On the Nature of Atmospherics IV," *Proc. Roy. Soc.*, 1937, Vol. 158, p. 1.

[3] Lutkin, F. E., "On the Nature of Atmospherics VI," *Proc. Roy. Soc.*, 1939, Vol. 171, p. 285.

[4] Schonland, B. J. et alia, "The Waveform of Atmospherics at Night," *Proc. Roy. Soc.*, 1940, Vol. 176, p. 150.

[5] Ockenden, C. V., "Sferics," *Met. Mag.*, 1947, Vol. 76, p. 1.

[6] Tuttle, W. N., "Bridged-T and Parallel-T circuits for Measurements at Radio Frequencies," *Proc. Inst. Radio Engrs*, 1940, Vol 28, p. 23.

[7] Lynch, W. A., "Video Amplification L.F. Correction," *Communications*, April 1943.

[8] Williams, F. C., and Moody, N. F., "Ranging Circuits, Linear Time Base Generators and Associated Circuits," *J. Instn Elect. Engrs*, 1947, Pt. IIIA, Vol. 93, p. 1188.

[9] Clarke, C., "A Meteorological Direction Finder," *Wireless World*, Sept. 1949, Vol. 55, No. 10 (Overseas Edition) S.12.

[10] Adcock, F., and Clarke, C., "The Location of Thunderstorms by Radio Direction Finding," *J. Instn Elect. Engrs*, 1947, Pt. III, Vol. 94, p. 118.

DIRECTIONAL-COUPLER ERRORS

Effect of Coupling-Probe Reflections

By F. A. Benson, M.Eng., A.M.I.E.E., M.I.R.E.

(The University of Sheffield)

SUMMARY.- It is shown that the well-known type of directional coupler in which two coupling probes are placed a quarter-wavelength apart in a transmission line has an inherent error caused by reflections from the probes. The error varies with the relative phase of the transmitted and reflected waves and also with the phases of the reflections at the probes.

Introduction

IT is now well known that broad-band directional couplers can be designed for the measurement of voltage standing-wave ratios or to serve as power monitors.[1] In one common form of directional coupler, which has been used extensively at frequencies in the region of 10,000 Mc/s, there are two coupling holes (or slots) between a pair of parallel transmission lines, the holes being spaced one quarter of a wavelength apart. Fig. 1 shows sketches of this type of coupler in a waveguide system. Consider a transmitted wave i_t in guide A [Fig. 1(a)] which radiates through holes 1 and 2 into guide B giving the components a_1, a_2, b_1 and b_2 shown. At 2 waves a_1 and a_2 in guide B are in time phase as they have travelled the same distance from 1 and, therefore, add to produce wave i_o. But for waves b_1 and b_2, travelling in the reverse direction in guide B, it is seen that the phase difference between the waves from 1 and those from 2 at point 1 is 180°.

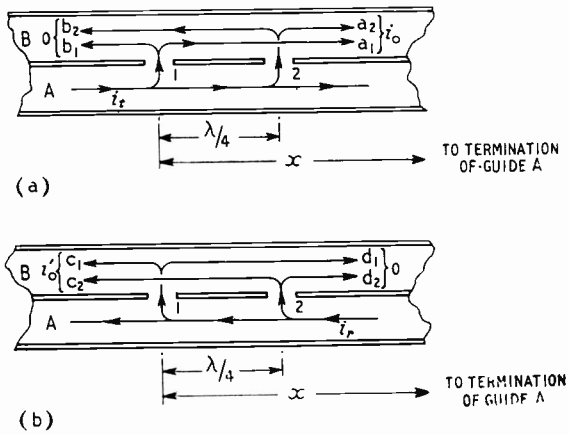

Fig. 1. *Common form of directional coupler for frequencies around 10,000 Mc/s.*

Therefore, no resultant wave due to i_t passes to the left of point 1 in guide B.

Considering now a reflected wave i_r, shown in Fig. 1(b), it is clear that the results are the opposite; that is, component waves c_1 and c_2 now add to give i_o' but d_1 and d_2 are 180° out of phase and cancel out.

Thus, the intensities of both the transmitted and reflected waves, i_t and i_r respectively, can be measured separately by including suitable detectors at the ends of guide B.

Experience has shown that such a directional coupler, apart from being frequency sensitive, may give incorrect indications of voltage standing-wave ratio or power. In this paper the errors caused by reflections from the coupling probes are discussed. It is shown that the coupler has an error which varies not only with the relative phase of the transmitted and reflected waves (that is, with the position of the standing-wave relative to the detectors) but also with the phases of the reflections at the probes.

The word probe is used throughout the paper to cover any device which couples to the electric-field of the waves in a transmission line.

Two-Probe Directional Coupler

Case 1. Probes Producing No Reflection

Consider the two probes 1 and 2 (Fig. 1) spaced a quarter of a wavelength apart. It will be assumed that it is required to measure the amplitude of the reflected wave from the termination of waveguide A, assumed to be at the right-hand side of Fig. 1.

Let the termination have a reflection coefficient $r_l.e^{j\phi}$. If the electric-field strength at a given moment at probe 1 in guide A due to the transmitted wave i_t is denoted by $E.e^{j\beta x}$, where $\beta = 2\pi/\lambda$, λ is the wavelength and x the distance between probe 1 and the termination, then that due to the reflected wave i_r at probe 1 is $r_l.E.e^{-j(\beta x-\phi)}$.

Also, the electric-field strengths at probe 2 in guide A due to the transmitted and reflected waves are $E.e^{j\beta(x-\lambda/4)}$ and $r_l.E.e^{-j(\beta x-\phi-\beta\lambda/4)}$ respectively.

Let the 'pick-up' of each probe be proportional to the electric-field strength at the probe. Then in waveguide B, to the left of probe 1 the components

MS accepted by the Editor, December 1950.

due to i_t cancel out and those due to i_r add as previously explained. Thus, if the probes produce no reflection and a detector is placed to the left of probe 1 in guide B the electric-field strength at the detector is proportional to

$$2.r_l.E.e^{j(\beta x - \phi)} \quad \ldots \quad (1)$$

The same result can be obtained mathematically as follows:—Since the path difference between probe 2 and the detector is a quarter-wavelength greater than between probe 1 and the detector, the field at the detector is proportional to:—

$$E.e^{j\beta x} + r_l.E.e^{j(\beta x - \phi)} + E.e^{j\beta(x + \lambda/4 - \lambda/4)} + r_l.E.e^{-j(\beta x - \phi - \beta\lambda/4 + \beta\lambda/4)}$$

Replacing $\beta\lambda$ by 2π this expression becomes:

$$2r_l.E.e^{-j(\beta x - \phi)} + E.e^{j\beta x}[1 + e^{-j\pi}] = 2r_l.E.e^{-j(\beta x - \phi)}$$

as before. If it is assumed that the detector deflection is directly proportional to the square of the electric-field strength (which is common) this deflection may be written as $k.4r_l^2E.^2 \quad \ldots \quad (2)$ where k is a constant.

Case 2. Probes Producing Reflection

Suppose now that each probe has a reflection coefficient of $r_pe^{j\theta}$. It should be noted that the impedance of almost any type of probe will have considerable reactance in addition to some resistance.

The electric-field strength at probe 1 in guide A due to the reflection from probe 2 is:

$$r_p.E.e^{j(\beta x + \theta + \pi)} \quad \ldots \quad (3)$$

since $\beta\lambda = 2\pi$

and that at probe 2 in guide A due to the reflection from probe 1 is

$$r_p.r_l.E.e^{j(\beta x - \phi + \theta + \pi/2)} \quad \ldots \quad (4)$$

Any further reflections will be neglected.

Hence, the total electric-field strength at the detector is now proportional to:—

$$2r_l.E.e^{-j(\beta x - \phi)} + r_p.E.e^{-j(\beta x - \theta - \pi)} + r_p.r_l.E.e^{j(\beta x - \phi + \theta - \pi)} \quad \ldots \quad (5)$$

Expression (5) can also be written as:—

$$E[2r_l\{\cos(\beta x - \phi) - j\sin(\beta x - \phi)\} + r_p\{\cos(\beta x - \theta - \pi) - j\sin(\beta x - \theta - \pi)\} + r_pr_l.\{\cos(\beta x - \phi + \theta + \pi) + j\sin(\beta x - \phi + \theta + \pi)\}] \quad \ldots \quad (6)$$

$$= E[2r_l\{\cos(\beta x - \phi) - j\sin(\beta x - \phi)\} + r_p\{-\cos(\beta x - \theta) + j\sin(\beta x - \theta)\} + r_p.r_l.\{-\cos(\beta x - \phi + \theta) - j\sin(\beta x - \phi + \theta)\}] \quad \ldots \quad (7)$$

The sum of the squares of the real and imaginary parts of expression (7) is:—

$$E^2[2r_l.\cos(\beta x - \phi) - r_p.\cos(\beta x - \theta) - r_p.r_l.\cos(\beta x + \theta - \phi)]^2 + E^2[-2r_l.\sin(\beta x - \phi) - r_p.r_l.\sin(\beta x - \phi + \theta) + r_p.\sin(\beta x - \theta)]^2 \quad \ldots \quad (8)$$

$$= E^2[4r_l^2 + r_p^2 + r_p^2.r_l^2 - 4r_l.r_p.\cos(\theta - \phi) - 4r_l^2.r_p.\cos(2\beta x + \theta - 2\phi) + 2r_p^2.r_l.\cos(2\beta x - \phi)] \quad \ldots \quad (9)$$

Hence, comparing (9) with (2), the apparent reflection coefficient R_l is seen to be given by:—

$$4R_l^2 = 4r_l^2 + r_p^2 + r_p^2r_l^2 - 4r_l.r_p.\cos(\theta - \phi) - 4r_l^2r_p\cos(2\beta x + \theta - 2\phi) + 2r_p^2.r_l.\cos(2\beta x - \phi) \quad \ldots \quad (10)$$

Thus, the apparent reflection coefficient R_l varies with both θ and ϕ.

It follows from (10) that the maximum possible value of R_l is given by:—

$$R_{l\,max.} = 1/2[(2 + r_p)r_l + r_p] \approx 1/2[2r_l + r_p] \quad \ldots \quad (11)$$

Similarly the minimum value of R_l is given by:—

$$R_{l\,min.} = 1/2[\{(2 - r_p)r_l - r_p\}^2 + 4r_p^2.r_l^2]^{\frac{1}{2}} \approx 1/2[2r_l - r_p] \quad \ldots \quad (12)$$

Thus, for all values of θ and ϕ the apparent reflection coefficient R_l, as measured by the instrument, varies between the limits $1/2(2r_l - r_p)$ and $1/2(2r_l + r_p)$, approximately.

Discussion

While no experiments have been carried out to test expression (10) quantitatively it has been definitely established that the errors may be considerably greater than is suggested and some care is necessary in the construction and use of the instrument if reasonable accuracy is to be expected.

The error will be made more serious than that calculated above by the following facts:—

1. An increase in the number of coupling probes.
2. The coupling probes may produce considerable mismatch in waveguide B as well as in A.
3. A mismatch of the detector itself.

REFERENCE

[1] Montgomery, "Technique of Microwave Measurements."—M.I.T. Radiation Laboratory Series, McGraw-Hill 1947, Sections 12 and 14.

CORRESPONDENCE

Letters to the Editor on technical subjects are always welcome. In publishing such communications the Editors do not necessarily endorse any technical or general statements which they may contain.

Distributed Amplification

SIR,—The need for wideband amplification has led to new interest in Percival's idea[1] of combining valves in parallel by means of low-pass filters. Both the gain-bandwidth product and the power-handling capacity are improved by this, so-called, distributed amplification.

The first detailed analysis of a distributed amplifier was made by Ginzton, Hewlett, Jasberg and Noe[2]; Horton, Jasberg and Noe[3] extended it and included some practical considerations. More recently Yu, Kallman and Christaldi[4] have made a multistage distributed amplifier, having a bandwidth of nearly 200 Mc/s, for millimicro-second oscillography. The first two articles deal largely with the attainment of constant gain over the pass band: the third, by Yu, etc., deals with pulse amplification.

The use of networks closely simulating ideal low-pass filters leads to constant gain and linearity of phase shift, β, with frequency, f, in the pass band of the amplifier. It must, however, necessarily have failings for the amplification of pulses having some part of their energy/frequency spectra outside the pass band. One failing arises because the step response of the amplifier can have an overshoot of 9%—more if the group delay $(d\beta/df)/2\pi$ increases with frequency (as it usually does with the simpler networks).

To illustrate this point, an amplifier was made with networks having a frequency of cut-off, f_c, of 63 Mc/s, a gain constant to within $\pm$ 0·2 db up to 50 Mc/s and a β/f relationship similar to that of a constant-k network. It gave the response shown in Fig. 1(a) when suitably coupled to the Y-deflector plates of an oscilloscope and supplied with a flat-topped pulse of duration 0·1 μS and rise time 0·007 μS.

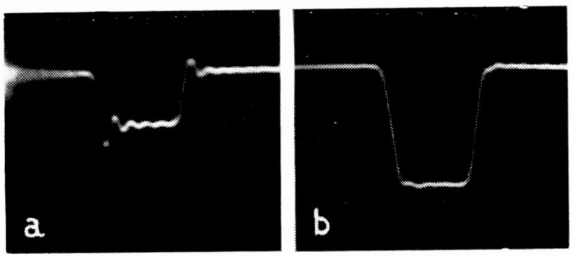

Fig. 1. *Pulse responses of two amplifiers; in each the mid-amplitude pulse width is 0·1 μsec.*

Overshoot is often undesirable in oscillography and Yu, etc., have drawn attention to the use of a Gaussian gain/frequency relationship ($M = M_0 e^{-kf^2}$) in order to secure a step response free from it. They state that the prescribed M/f relationship should be followed closely at least until M has fallen to 0·3 M_0. They were able to achieve a response approaching this, without departing from simple networks, because their choice of f_c ($\approx$ 200 Mc/s) made the input conductance of the valves used (rising as f^2) a significant component in determining the response from 50 Mc/s upwards. This method cannot be applied however to values of f_c several times smaller than theirs, unless another conductance varying with f_c in a suitable way can be obtained.

We have experimented with several networks in an endeavour to approach the Gaussian relationship and to find how closely, and to what upper frequency, $d\beta/df$ must remain constant. Work on the interchannel crosstalk in a time-division multiplex system[5] has led us to investigate the performance of amplifiers using networks composed of the sections shown in Fig. 2. The networks contain dissipative elements, and therefore involve some sacrifice of the product of gain and bandwidth; but their delay distortions can be much less than those of the non-dissipative m-derived networks from which they originated. An amplifier using either of these two networks can moreover be made to have an M/f relationship which is closely Gaussian up to about 0·8 f_c. Thus an amplifier using networks similar to those of Fig. 2(a), having f_c = 63 Mc/s and using four CV 2127 (6CH6) valves gave the response shown in Fig. 1(b) to the flat-

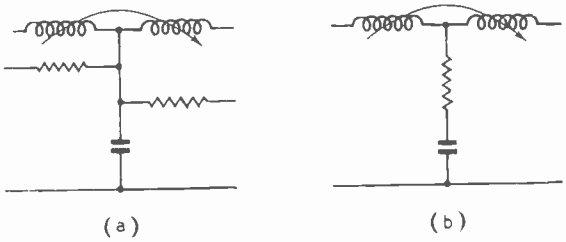

Fig. 2. *Networks giving reduced overshoot.*

topped pulse referred to earlier. The considerable reduction in overshoot, which we think may be carried further, has however been bought only at considerable sacrifice of rise time; whereas Fig. 1(b) shows the amplifier to have a rise time of about 0·013 μS, an ideal low-pass network, with f_c = 63 Mc/s, would have a rise time of about 0·007 μS. Nevertheless, some users will consider this sacrifice worth while when the upper limit of the spectrum of the input waveform is not known to be within the pass band of the amplifier.

H. G. BASSETT.
J. R. TILLMAN.

P.O. Research Station,
Dollis Hill,
London, N.W.2.
5th November, 1951.

REFERENCES

[1] W. S. Percival. British Patent Specification No. 460562.
[2] E. L. Ginzton, W. R. Hewlett, J. H. Jasberg and J. D. Noe. "Distributed Amplification." *Proc. Inst. Radio Engrs*, 1948, Vol. 36, p. 756.
[3] W. W. Horton, J. H. Jasberg and J. D. Noe. "Distributed Amplifiers. Practical Considerations and Experimental Results." *Proc. Inst. Radio Engrs*, 1950, Vol. 38, p. 748.
[4] Y. P. Yu, H. E. Kallman and P. S. Christaldi. "Millimicrosecond Oscillography." *Electronics*, 1951, Vol. 24, No. 7, p. 106.
[5] J. E. Flood and J. R. Tillman. "Crosstalk in Amplitude Modulated Time-Division-Multiplex Systems." *Proc. Instn elect. Engrs*, 1951, Vol. 98, Part III, p. 279.

I.E.E. MEETING

17th December. "What Practical Benefits can Communication Engineers expect from the Modern Information Theory?", by E. C. Cherry. To be held at the Institution, Savoy Place, London, W.C.2, at 5.30 p.m.

Brit.I.R.E. MEETING

13th December. "Electronic Analogues of Physiological Processes", by W. Grey Walter, M.A., Sc.D., and H. W. Shipton. To be held at the London School of Hygiene and Tropical Medicine, Keppel St., Gower St., London, W.C.1, at 6.30 p.m.

NEW BOOKS

Theory and Design of Valve Oscillators (2nd edition)

By H. A. Thomas, D.Sc., M.I.E.E. Pp. 317 + xv with 157 illustrations. Chapman & Hall, Ltd., 37 Essex Street, London, W.C.2. Price 36s.

In this new edition the old material has been rearranged to a considerable extent and two new chapters have been included. The book starts with a description of the various forms of LC oscillator, including transitron types. The conditions for the maintenance of oscillation are then discussed and following chapters cover amplitude, waveform, efficiency, frequency, frequency-stability and methods of frequency stabilization. In the final five chapters, RC oscillators, crystal oscillators, v.h.f. oscillators, v.m. oscillators and magnetrons are covered. The book concludes with a 7-page bibliography and an index.

The treatment is explanatory rather than analytical, and one result of this is to make the book unusually free from mathematics. It is by no means entirely free from them and the author does not hesitate to use them where they are helpful. They are generally of simple form, however, and occur only when necessary.

Quite early on in the book the author classifies the various forms of LC oscillator and he includes what is usually known as the 'modified Colpitt's oscillator' under the heading of a Hartley oscillator, Fig. 6(b). The circuit is one with a single untapped coil; a capacitance tap for the cathode of the valve is obtained from the grid-cathode and anode-cathode valve capacitances, the tuning capacitance being across the coil directly between grid and anode. The essential requirement of a Hartley oscillator is surely a tapping on the coil.

On page 18 the author states that "The maintaining system always takes the form of a shunt circuit across the tuned system." Had he said 'usually' instead of 'always', no one would disagree, but there are oscillators in which the maintaining system is inserted in series with the tuned circuit. Perhaps the author considers these to be shunt maintained with the maintaining system tapped down the tuned circuit, but he does not say so. This is a possible way of looking at them, but hardly the simplest.

These are very minor points of criticism about an excellent book which will undoubtedly prove very valuable to all who are concerned with oscillators. The part dealing with frequency stability and matters connected therewith is especially valuable and occupies some 140 pages. In it the author treats both mechanical and electrical forms of instability and discusses the various types of circuit which have been used to obtain high stability, and he points out that some of these are based on the fallacy that the effects of the maintaining circuit are eliminated if the maintained frequency is made equal to that of the LC circuit alone.

W. T. C.

Advanced Theory of Waveguides

By L. Lewin. Pp. 192 with 54 illustrations. Published for *Wireless Engineer* by Iliffe & Sons, Ltd., Dorset House, Stamford Street, London, S.E.1. Price 30s.

Covers posts, diaphragms, windows, steps, tapers and T-junctions in waveguides. Radiation from waveguides is treated as well as propagation in loaded and corrugated guides.

Plastics Progress

Papers and Discussions at the British Plastics Convention 1951. Edited by Philip Morgan, M.A. Pp. 310. Published for *British Plastics* by Iliffe & Sons, Ltd., Dorset House, Stamford Street, London, S.E.1. Price 50s.

BRITISH STANDARDS

Limits of Radio Interference. B.S. 800 : 1951. Pp. 22. Price 3s.

This is a revision of the standard first issued in 1939 and forms one of a series dealing with the abatement of radio interference. It gives the permissible limit of noise field or voltage generated by many electrical appliances within the 200-1 605-kc/s band.

The chief changes since the earlier edition are that now noise voltage is measured between each line terminal of the equipment in turn and earth, and not between the terminals themselves, and the permissible limit of noise voltage is 1 500 μV instead of 500 μV. This change results partly from the different method of measurement but that it results in some increase in the interference level considered to be permissible is implicit in the statements that the increase of field strengths of broadcasting stations and the economic situation have been taken into account.

In addition, the methods of sampling for the measurement of continuous noise have been simplified, the clauses dealing with discontinuous and intermittent noise have been revised, and a method of sampling applicable to them has been included.

W. T. C.

Graphical Symbols used in Waveguide Techniques. B.S. 530 : 1948, Supplement No. 2 (1951). Pp. 24. Price 3s.

Two sets of symbols are included in Section 1 of this standard, one for use mainly in diagrams of actual apparatus and the other for theoretical diagrams. In the former, pairs of parallel lines are used to represent a waveguide, whereas in the latter only a single line is employed. These single-line symbols are based on "Standards on Abbreviations, Graphical Symbols, Letter Symbols and Mathematical Signs" published in America by the Institute of Radio Engineers.

Some additional symbols for use on installation diagrams are included in Section 2.

The majority of the symbols are reasonably self-explanatory, probably as much as it is practicable to make them. The two-line symbols, being more pictorial, are easier to understand than the one-line, but are naturally more difficult to draw. Until one has acquired familiarity with them, it is certainly necessary to refer to the list of symbols when drawing diagrams and it is probably also necessary when reading them.

W. T. C.

British Standard for Dry Batteries for Domestic Radio Receivers. B.S. 1766 : 1951. Price 2s.

Glossary of Piezo-electric Terms. Supplement No. 5 to B.S. 204. Price 1s.

British Standards Year Book 1951. Pp. 400. Price 7s. 6d.

Contains a list of the 1 700 British Standards current at 31st December 1950 with a brief description of the subject matter and scope of each and also a supplementary list of Standards issued between 1st January and 31st March 1951.

All these publications can be obtained from the British Standards Institution, 24 Victoria Street, London, S.W.1.

ERRATUM

In the article, "RC-Coupling Network for Pulse Transmission", by Hilary Moss, in the November issue, the two sets of oscillograms of Figs. 5 and 6 were transposed.

VALVES AND THERMIONICS

535.215.4 **2859**

Investigations of the External Photoelectric Effect in Cuprous and Cupric Oxide.—L. Meyer-Schützmeister. (*Z. Phys.*, 13th Feb. 1951, Vol. 129, No. 2, pp. 148–160.) I/V characteristics for semiconductor and metal photocathodes were compared, using a photocell of specially adapted construction. For metal cathodes, the negative anode voltage at which cutoff occurs is independent of the material; for semiconductors the cutoff voltage does depend on the material. The results suggest that the energy levels of the electrons released by the external photoelectric effect are lower in semiconductors than in metals, by about 0·1 V for Cu_2O and by about 0·55 V for CuO.

621.383.4 **2860**

Critical Review of Semiconductor-Photoresistance Cells.—H. Helbig. (*Elektron Wiss. Tech.*, Feb./March 1951, Vol. 5, Nos. 2/3, pp. 57–62.) An attempt to define the useful field of application of such cells, with special reference to the CdS type. Mainly useful where intense illumination is to produce a current of the order of a milliampere, and where changes do not take place rapidly, they can be used in relay circuits, for sound-film recording, and for qualitative indication of X radiation. They are unsuitable for accurate measurements.

621.383.4 **2861**

Operating Limits of Photoresistances.—H. Müser. (*Z. Phys.*, 28th April 1951, Vol. 129, No. 5, pp. 504–516.) The useful range of operation is limited by the resistance noise in the semiconductor; the magnitude of this is calculated. It is generally greater than the thermodynamic fluctuations due to the temperature radiation of the surroundings. This noise limitation cannot be overcome by using devices such as long-period galvanometers, narrow-band amplifiers, etc., to suppress the noise.

621.383.4 **2862**

The Characteristics and Properties of Lead Sulphide Photoresistors.—B. T. Kolomiets. (*Zh. tekh. Fiz.*, Jan. 1951, Vol. 21, No. 1, pp. 3–11.) A report on an extensive experimental investigation; results are presented in tables and curves. The main conclusion is that these resistances are highly suitable for a number of practical applications.

621.385 **2863**

Design of Robust, Shock-Proof Electronic Valves.—G. Lewin. (*Le Vide*, March 1951, Vol. 6, No. 32, pp. 974–978.) The effect of mechanical shock on a valve is analysed; its magnitude depends on the rigidity of the assembly. On this basis design fundamentals are developed; data are given regarding the physical properties of the metals used and the correct use of fragile materials such as glass.

621.385.001.4 **2864**

Radio Valve Life Testing.—Brewer. (See 2773.)

621.385.029.64/.65 **2865**

New Travelling-Wave Valves for Microwaves.—H. H. Klinger. (*Arch. elekt. Übertragung*, April 1951, Vol. 5, No. 4, pp. 167–168.) Two valves are briefly described, whose operation is based on direct exchange of energy between electrons and electromagnetic wave; both use arrays of metal dipoles, of delay-lens type, to slow down the waves. One of the valves is a modified drift-space klystron, the other uses a reflector to bend the electron beam, which is injected at an angle to the delay field. Inherent noise is low; useful wavelength range is probably limited to 1–2 cm.

612.385.029.64 **2866**

On the Theory of Electron Wave Tubes.—O. E. H. Rydbeck & S. K. H. Forsgren. (*Chalmers tekn. Högsk. Handl.*, 1951, No. 102, 29 pp. In English.) Equations are derived first for the waves produced in a single-beam valve with strong axial magnetic focusing; both beam waves and guide waves are present. When the beam is shot into a neutral ionized gas, strong travelling waves may be excited. The effect of reducing the magnetic field is investigated. Analysis for a two-beam valve indicates that klystron waves, plasma waves and interaction waves are all present, the distribution of energy between them depending on the manner of excitation. The theoretical results are in agreement with measurements on a 3-kMc/s two-beam valve developed at the Chalmers Research Laboratory.

621.385.032.212 **2867**

A New Modulated Light Source.—J. A. Darbyshire. (*Electronic Engng*, May 1951, Vol. 23, No. 279, pp. 167–169.) The Ferranti GMC 6 'crater lamp' is described and compared with the older MAC 4. It has a higher light output for given current and better linearity; coating of the viewing window by evaporated barium has been eliminated. Operating conditions for particular applications are stated.

621.385.15 **2868**

Secondary Electron Multipliers.—N. Schaetti. (*Z. angew. Math. Phys.*, 15th May 1951, Vol. 2, No. 3, pp. 123–158.) A survey paper reviewing secondary emission phenomena, the production of suitable emitting surfaces, types and operating characteristics of photomultipliers, and applications in various fields. A bibliography comprising 80 items is provided.

621.385.18 **2869**

Controllable Gas Diode.—E. O. Johnson. (*Electronics*, May 1951, Vol. 24, No. 5, pp. 107–109.) The object of the device, which is called a 'plasmatron', is to combine the continuous control afforded by the vacuum valve with the low impedance of the thyratron. It is operated at an anode potential too low to cause ionization. A discharge is set up between the anode and an auxiliary cathode, the discharge current being controlled by a small conventional hard valve. The current flowing between anode and main cathode can be controlled by varying the auxiliary discharge current with fairly good linearity, a current ratio of 90 : 1 having been obtained.

621.385.2 **2870**

Thermodynamics of a Two-Cathode System.—H. Dormont. (*Le Vide*, March 1951, Vol. 6, No. 32, pp. 979–984.) The results obtained by Champeix (2586 of October) are shown to be valid only for the limiting case where the temperature difference between the two electrodes is small compared with their mean temperature. Discussion of the source of thermionic emission in oxide cathodes is continued; further experimental data are required.

621.385.2 : 537.525.92 **2871**

The Space-Charge Smoothing Factor.—C. S. Bull. (*Proc. Instn elect. Engrs*, Part III, July 1951, Vol. 98, No. 54, p. 278.) Discussion on 2058 of August.

621.385.3/.4 **2872**

U.S.W. Transmitting Valves.—H. Rothe, W. Engbert & H. Kraft. (*Telefunken Ztg*, Dec. 1950, Vol. 23, No. 89, pp. 175–182.) For the final power stages of transmitters operating in the 100-Mc/s band (*a*) the grounded-grid triode and (*b*) the grounded-cathode tetrode are of particular interest. To maintain the electrode connections as lossless as possible, disk seals are most suitable.

The high power necessarily drawn by the control circuit in (*a*) is largely available as useful power at the anode. In (*b*) the much lower power required increases with rising frequency due to the inductance of the cathode leads. The construction and operating characteristics of two 10-kW triodes and three tetrodes for powers of 0·25 kW, 1 kW and 3 kW are shown.

621.385.38 **2873**

Grid Current and Grid Emission Studies in Thyratrons — the Trigger-Grid Thyratron.—L. Malter & M. R. Boyd. (*Proc. Inst. Radio Engrs*, June 1951, Vol. 39, No. 6, pp. 636–643.)

621.385.38 : 537.315 **2874**

The Distribution of the Electric Field in a Three-Electrode Gas-Discharge Tube with a Large Back Voltage.—V. D. Andreev, L. E. Levina & B. G. Mendelev. (*Zh. tekh. Fiz.*, Feb. 1951, Vol. 21, No. 2, pp. 149–154.) The potential distribution in the plasma between the anode and grid of a Hg-vapour tube during the reverse half-cycle was investigated by taking oscillograms of probe currents. On the basis of the results obtained the division of the voltage between the electrodes is discussed.

621.396.615.142 : [537.525.6 : 538.56 **2875**

Electron Plasma Oscillations.—G. Wehner. (*J. appl. Phys.*, June 1951, Vol. 22, No. 6, pp. 761–765.) "Electron plasma oscillations are excited by a beam of fast electrons in a stabilized low-pressure mercury discharge. Probe measurements reveal that the u.h.f. fields are localized in thin layers, the plasma density and frequency of which follow Langmuir's law. The beam of fast electrons traversing such an oscillation layer becomes velocity modulated, and excitation conditions result from drift time and bunching considerations similar to those in a klystron. A sealed-off tube described covers a frequency range between 800 and 4 000 Mc/s (five modes) without changing or matching any resonance circuit."

621.396.615.142.2 : 621.397.61 **2876**

Five-kW Klystron U.H.F. Television Transmitter.—Crosby. (See 2849.)

621.396.822 **2877**

The Nature of Currents producing the Main Component of Radio Valve Noise.—A. R. Shul'man. (*Zh. tekh. Fiz.*, Dec. 1950, Vol. 20, No. 12, pp. 1505–1508.) A noise component of frequency between 50 and 100 c/s usually appears in the anode circuit of a valve with an indirectly heated cathode. Experiments were conducted to determine the origin of this component, and it is concluded that it is due to current between the heater and the cathode, produced by thermal emission of electrons from the heater on to the cathode, and sometimes from the cathode on to the heater. The value of the current is affected by impurities, and can be considerably reduced by a suitable treatment of the heater material.

621.396.822 **2878**

Induced Grid Noise in Triodes.—A. van der Ziel. (*Wireless Engr*, July 1951, Vol. 28, No. 334, pp. 226–227.) The Llewellyn-Peterson theory of valve operation at u.h.f. (2578 of 1944) is applied to extend Bell's formula (1833 of 1950) for induced grid noise in triodes and pentodes; better agreement with experimental results is thus obtained.

621.396.822 : 621.396.645.3.029.42 **2879**

Experimental Investigation of Fluctuation Phenomena Limiting the Operation of Direct-Voltage and Very-Low-Frequency Amplifiers.—K. Kronenberger. (*Z. angew. Phys.*, Jan. 1951, Vol. 3, No. 1, pp. 1–5.) Results are presented of noise measurements on valve amplifiers under different operating conditions. Fluctuations of heater and anode supply voltages constitute the most important source of noise. When these voltages are nearly constant, i.e., vary by $< 10^{-5}\%$, in the oxide-cathode valve operating below 0·1 c/s the effect of emission-drift is the most serious, and above 0·1 c/s the flicker effect; for the tungsten cathode the anomalous flicker effect determines the sensitivity. Since the noise voltage of an unwanted signal is generally higher at the low-frequency end of the spectrum, advantages are gained by mechanical conversion of a direct voltage to high-frequency voltage before amplification.

621.385.832 **2880**

Le Tube à Rayons Cathodiques. [Book Review]—L. Chrétien. Publishers: Chiron, Paris, 1950, 191 pp., 585 fr. (*Ann. Télécommun.*, Feb. 1951, Vol. 6, No. 2, p. 58.) A manual for practicians and students, dealing with the use of the c.r. tube in measurement, radar and television applications.

MISCELLANEOUS

621.396.001.5 **2881**

Engineering Research of the British Broadcasting Corporation.—(*Engineering, Lond.*, 29th June 1951, Vol. 171, No. 4457, pp. 793–795.) A brief survey of investigations in progress, including work on high-definition and colour television, interference between transmitters sharing a frequency channel, impulsive interference, and methods of economizing on bandwidth; field-strength mapping; design and performance of transmitting aerials, using models for much of the work; development of broadcast and special-purpose receivers; electroacoustics. See also *Elect. Rev., Lond.*, 29th June 1951, Vol. 148, No. 3840, pp. 1341–1343 and *Elect. Times*, 28th June 1951, Vol. 119, No. 3112, pp. 1098–1100.

621.396.001.57 **2882**

Technical Development and Research by Telefunken during the War.—H. Lux. (*Telefunken Ztg*, Sept. 1950, Vol. 23, Nos. 87/88, pp. 11–26.) A brief review is given of advances in the following branches: valve development, including h.f., metal/ceramic and t.r. switching valves, high-power types with thoria cathodes, and transit-time types; medium- and high-power transmitters and measuring equipment; decimetre-wave technique in communications, including radio links; radar and radio navigation; piezoelectric crystals; h.f. heating technique; general research on propagation in the wavelength range 20 m–10 cm, on aerials, on receiver sensitivity, and on h.f. measuring techniques; a.f. techniques and electro-acoustics; and techniques related to television.

621.38 **2883**

Electronic Fundamentals and Applications. [Book Review]—J. D. Ryder. Publishers: Prentice-Hall, New York, 806 pp., $9.00. (*Radio & Televis. News, Radio-Electronic Engng Supplement*, April 1951, Vol. 16, No. 4, p. 26.) "Written to give the student a knowledge of . . . the physical principles underlying electron tubes, the characteristics of the tubes themselves, and the electrical circuits in which they are used. . ."

621.39 **2884**

Telecommunications Principles. [Book Review]—R. N. Renton. Publishers: Pitman, London, 450 pp., 37s. 6d. (*Electrician*, 6th April 1951, Vol. 146, No. 3799, p. 1131.) Covers the City and Guilds examination syllabus, Grades I, II and III. Many examples are worked out. "The work can be most highly recommended."

ABSTRACTS and REFERENCES

Compiled by the Radio Research Organization of the Department of Scientific and Industrial Research and published by arrangement with that Department.

The abstracts are classified in accordance with the Universal Decimal Classification. They are arranged within broad subject sections in the order of the U.D.C. numbers, except that notices of book reviews are placed at the ends of the sections. U.D.C. numbers marked with a dagger (†) must be regarded as provisional. The abbreviations of the titles of journals are taken from the World List of Scientific Periodicals. Titles that do not appear in this List are abbreviated in a style conforming to it.

	PAGE A
Acoustics and Audio Frequencies	225
Aerials and Transmission Lines	226
Circuits and Circuit Elements	228
General Physics	230
Geophysical and Extraterrestrial Phenomena	231
Location and Aids to Navigation	233
Materials and Subsidiary Techniques	234
Mathematics	235
Measurements and Test Gear	236
Other Applications of Radio and Electronics	238
Propagation of Waves	239
Reception	240
Stations and Communication Systems	240
Subsidiary Apparatus	241
Television and Phototelegraphy	241
Transmission	243
Valves and Thermionics	243
Miscellaneous	246

ACOUSTICS AND AUDIO FREQUENCIES

534.321.9 **2885**

Heavy-Duty Quartz Ultrasonic Generator.—H. H. Rust. (*Naturwissenschaften*, May 1951, Vol. 38, No. 10, pp. 235–236.) Quartz plates with electrodes consisting of grids of parallel thin copper wires were found to stand up to heavy duty better than types with metal-plate electrodes.

534.321.9 **2886**

Research and Analysis relating to Ultrasonics in Everyday Life.—P. Chavasse & R. Lehmann. (*Ann. Télécommun.*, April 1951, Vol. 6, No. 4, pp. 98–101.) Difficulties in the analysis of sonic and ultrasonic vibrations are discussed, and the heterodyne frequency analyser noted in 936 of 1950 (Pimonov) is briefly described. Examples of the occurrence of ultrasonic vibrations in nature and in industry are given.

534.41.087.252 **2887**

Musical Stroboscopes and Strobographs.—V. Gavreau. (*Ann. Télécommun.*, May 1951, Vol. 6, No. 5, pp. 117–121.) Description of the principle and uses of stroboscopes designed for testing musical instruments and for analysing sounds. A series of endless ribbons, graduated to correspond respectively with the notes of the musical scale, are driven at fixed frequency by a drum and illuminated by a neon lamp controlled by the output from a microphone. In the recording type of instrument a transparent stroboscopic plate is fixed in front of a constant-speed film.

534.613 **2888**

Radiation Pressure in Acoustics.—J. Mercier. (*C. R. Acad. Sci., Paris*, 11th June 1951, Vol. 232, No. 24, pp. 2181–2183.) Radiation pressure is evaluated in general terms by considering the propagation of energy along the wave; it is found to be given by the time rate of change of quantity of movement, which is equal to the density of energy of the waves in contact with the obstacle.

534.75 **2889**

The Cerebral Mechanisms of the Binaural Functions. Summation and Lateral Location.—H. Piéron. (*Ann. Télécommun.*, April 1951, Vol. 6, No. 4, pp. 102–109.) Criticism of a paper by Fletcher (2398 of 1938). Oversimplification of theory is alleged, leading to results directly contradicting accepted physiological facts of binaural hearing; Fletcher's loudness curve is regarded as invalid.

534.84 **2890**

Sound Reproduction in Halls and Open Spaces.—F. Bergtold. (*Fernmeldetech. Z.*, March 1951, Vol. 4, No. 3, pp. 112–116.) General discussion of the arrangement of loudspeakers to give pleasing reproduction, taking into account size and shape of the hall, attenuation of higher frequencies, distortion and noise at the sound source, and reverberation. The methods of beamed and diffuse sound projection are compared from both technical and economic viewpoints.

534.86 : 534.322.1 **2891**

The Effect of Sound Intensity Level on Judgment of 'Tonal Range' and 'Volume Level'.—S. E. Stuntz. (*Audio Engng*, June 1951, Vol. 35, No. 6, pp. 17–19, 26.) A discussion of factors affecting the conclusions drawn from listener preference tests.

621.3.018.78† **2892**

The Influence of High-Order Products in Nonlinear Distortion.—D. E. L. Shorter. (*Electronic Engng*, April 1950, Vol. 22, No. 266, pp. 152–153.) Subjective assessments of nonlinear distortion in a transmitting system are compared with the objective results obtained by using the r.m.s. total harmonic-distortion figures and with those obtained by taking special account of high-order harmonics. The influence of high-order harmonics on reproduction is out of proportion to their energy content and some system of weighting is advocated.

621.3.018.78† **2893**

The Influence of High-Order Products in Non linear Distortion.—M. V. Callendar: D. E. L. Shorter. (*Electronic Engng*, Oct. 1950, Vol. 22, No. 272, p. 443.) Comment on 2892 above and author's reply.

621.3.018.78† **2894**

The Influence of High-Order Products on Nonlinear Distortion.—D. B. Corbyn: D. E. L. Shorter. (*Electronic Engng*, Jan. 1951, Vol. 23, No. 275, p. 35.) Further comment on 2892 above and author's reply.

621.395.62 : 621.317.3 **2895**

Objective Measurements on Telephone Earpieces.—H. Meister. (*Tech. Mitt. schweiz. Telegr.-TelephVerw.*, 1st June 1951, Vol. 29, No. 6, pp. 220–222. In German and French.) Methods adopted by the Swiss telephone authority for measuring frequency response and volume characteristics are discussed briefly (see also 2896 below). Good agreement was found between the results of these objective tests and those obtained by subjective methods used earlier.

621.395.62 : 621.317.79 **2896**

Apparatus for Testing Telephone Earpieces.—R. Kallen. (*Tech. Mitt. schweiz. Telegr.-TelephVerw.*, 1st June 1951, Vol. 29, No. 6, pp. 222–228. In German and French.) Detailed description of the apparatus referred to in 2895 above. The frequency of the testing voltage is varied logarithmically from 4 kc/s to 400 c/s in $\frac{1}{5}$ sec. The output from the earpiece is picked up by an artificial ear consisting of a capacitor microphone with a pressure chamber whose acoustic impedance corresponds to that of the ear. The amplified voltage from this is rectified, and the output, varying as the square root of the input, is examined by means of an integrating circuit and voltmeter, or displayed on a c.r.o. screen.

621.395.623.7 **2897**

Cabinets for High-Quality Direct Radiator Loudspeakers.—H. F. Olson. (*Radio & Televis. News*, May 1951, Vol. 45, No. 5, pp. 53–56..86.) An experimental examination of the various factors which influence the performance of a loudspeaker mounted in a completely closed cabinet.

621.395.623.7 **2898**

The Fidelity of Transient Reproduction by Loudspeakers.—J. C. Hentsch. (*Tech. Mitt. schweiz. Telegr.-TelephVerw.*, 1st June 1951, Vol. 29, No. 6, pp. 201–211. In French.) The response of the human ear to transient sounds and the effect of binaural hearing are discussed. A method of obtaining and analysing the mean frequency-response curve of a loudspeaker, allowing for subjective effects, is outlined; this curve suffices to determine the quality of reproduction of transients. Oscillographic examination of the actual deformations caused by the reproducer is not a reliable means. A method for eliminating loudspeaker interference effects is described.

621.395.623.7 **2899**

Explosion-Proof Loudspeaker.—S. J. White. (*Tele-Tech*, May 1951, Vol. 10, No. 5, pp. 46–47, 86.) The driver unit is enclosed in a cast housing attached to the horn structure, and between them is a barrier with an effective porosity which is a function of air-particle velocity. Sudden internal or external blast is resisted, but normal audio transmission is permitted.

621.395.625.3 **2900**

Broadcast Tape Speed Control.—D. R. Andrews. (*Electronics*, July 1951, Vol. 24, No. 7, pp. 120–123.) To ensure that the duration of a half-hour programme played back from a magnetic-tape record is constant to within 1 sec, timing marks are printed on the back of the tape and scanned by a photoelectric arrangement to provide a reference signal.

621.395.625.3 : 778.5 **2901**

Special Techniques in Magnetic Recording for Motion Picture Production.—G. Lewin. (*J. Soc. Mot. Pict. Televis. Engrs*, June 1951, Vol. 56, No. 6, pp. 653–663.)

621.396.645.029.3 : 621.385.3/.4 **2902**

A Comparison of Triodes and Beam-Tetrodes as Power Output Valves in Audio Amplifiers.—Bruckmann, Carey & Fuller. (See 2959.)

681.85 **2903**

Recording Styli, the Burnishing Facet, and a Process for Resharpening.—C. F. Strandberg. (*Elect. Engng, N.Y.*, May 1951, Vol. 70, No. 5, pp. 447–450.) A method of resharpening sapphire, stellite and steel styli without regrinding involves immersion in a NaOH cleansing solution.

534.84 **2904**

Die wissenschaftlichen Grundlagen der Raumakustik: Band 3 — Wellentheoretische Raumakustik. [Book Review]—L. Cremer. Publishers: S. Hirzel Verlag, Leipzig, 1950, 355 pp., 21.50 DM. (*Z. Ver. dtsch. Ing.*, 21st June 1951, Vol. 93, No. 18, p. 623.) Written primarily for physicists, this volume deals with the systematic development and investigation of sound-absorbing arrangements by means of wave theory.

AERIALS AND TRANSMISSION LINES

621.315.21 : 621.395.97 **2905**

Cables for Sound Distribution.—R. C. Mildner. (*Elect. Radio Trading*, May 1951, Vol. 23, No. 258, pp. 77–81.) A practical review, primarily for the installation engineer, of the types of cable available and the factors to be considered in designing and installing a distribution system.

621.316.683 **2906**

High-Frequency Connectors.—H. Nitsche. (*Fernmeldetech. Z.*, March 1951, Vol. 4, No. 3, pp. 97–102.) An account of the design and characteristics of 'Dezifix'-type connectors developed for coaxial-cable coupling at frequencies up to 3 kMc/s. The two halves of the connector are identical and are secured by a square-threaded cap.

621.392 **2907**

A Variable-Length Radio-Frequency Transmission-Line Section.—K. R. McAlister. (*J. sci. Instrum.*, May 1951, Vol. 28, No. 5, pp. 142–143.) Description of a coaxial line lengthener having constant characteristic impedance (50 ohms) throughout its length. It is not frequency selective and its reflection coefficient is $\not> 5\%$.

621.392 + 621.315.2121.018.44 **2908**

Reduction of Skin-Effect Losses by the Use of Laminated Conductors.—A. M. Clogston. (*Proc. Inst. Radio Engrs*, July 1951, Vol. 39, No. 7, pp. 767–782; *Bell Syst. tech. J.*, July 1951, Vol. 30, No. 3, pp. 491–529.) Skin-effect losses can be reduced in transmission lines by using conductors composed of insulated laminations, and adjusting the velocity of wave transmission. Theory for such laminated lines is presented for the case of planar systems with infinitesimally thin laminae and with laminae of finite thickness. A transmission line completely filled with laminated material is considered. An analysis is given of the modes of transmission in a laminated line and of the problem of terminating such a line.

621.392.22 : 517.512.2 **2909**

Fourier Transforms in the Theory of Inhomogeneous Transmission Lines.—F. Bolinder. (*Kungl. tekn. Högsk. Handl., Stockholm*, 1951, No. 48, 84 pp. In English.) In comparison with other theoretical methods, the Fourier-integral method appears to give the best approximate solution for inhomogeneous lines. The analogy with aerial and pulse theories is discussed, and the method applied to various types of nonuniform lines with constant or varying propagation velocity. A fundamental law governing the problem of 'broad banding' is indicated. See also 562 of March.

621.392.26† **2910**

Metal Waveguides with Parallelogram Cross-Section.—R. Malvano. (*Nuovo Cim.*, 2nd July 1949, Vol. 6, No. 4, pp. 265–273.) Formulae are derived for the TM and TE modes. Possible applications of this waveguide are indicated.

621.392.26† : 538.61 **2911**

Magneto-optics of an Electron Gas with Guided Microwaves.—L. Goldstein, M. Lampert & J. Heney. (*Phys. Rev.*, 15th June 1951, Vol. 82, No. 6, pp. 956–957.) Frequencies between 4·6 and 5·5 kMc/s were used with a circular guide in an axial magnetic field, the plasma from a pulsed d.c. gas discharge being used as the dielectric. Large angles of rotation of the electric field were observed, and resonance occurred near the gyromagnetic frequency. The results are explained in terms of the decomposition of the 'linear' wave into 'anomalous' and 'normal' circularly polarized waves.

621.392.26† : 621.392.52 **2912**

Corrugated-Waveguide Band-Pass Filters.—J. C. Greene. (*Electronics*, July 1951, Vol. 24, No. 7, pp. 117–119.) Design principles and experimental results are presented. The high-pass properties of a waveguide are combined with the low-pass properties of a corrugated surface inserted into the waveguide, giving a sharp transition between pass and attenuation bands. A single corrugated element replaces several elements used in conventional designs.

621.392.26† : 621.396.6.002.2 **2913**

Microwave Components: Precision Casting vs. Electroforming.—A. A. Feldmann. (*Materials & Methods*, July 1951, Vol. 34, No. 1, pp. 70–72.) Description of methods used in the manufacture of waveguide elements.

621.392.5 **2914**

Delay Lines.—J. Moline. (*Radio franç.*, March & April 1951, Nos. 3 & 4, pp. 16–19 & 5–8.) Phenomena of propagation in transmission lines are explained, and the construction and various uses of artificial delay lines are described.

621.392.54 **2915**

Long-Line Attenuation Equalization.—K. M. Garven. (*Commun. Rev.*, June 1950, Vol. 2, No. 2, pp. 53–62.) A convenient formula is worked out for the insertion loss of a network, the conventional interaction term being avoided. The general formula for the overall insertion loss of a succession of four-terminal networks connected in tandem is derived and applied to consideration of equalization requirements in a long line.

621.396.67 **2916**

Practical Calculation of Modern Broadcast Transmitting Aerials in the Medium Wave-Band.—K. Fischer. (*Elektrotech. u. Maschinenb.*, 15th March & 1st April 1951, Vol. 68, Nos. 6 & 7, pp. 153–157 & 183–187.) Discussion of (*a*) graphical determination of impedance and mutual coupling of aerial elements; (*b*) the influence of a capacitive roof on a mast radiator; (*c*) the method of calculating the radiation diagram of vertical arrays and means of obtaining a directional characteristic. Supplementary to paper noted in 38 of 1950.

621.396.67 : 517.6 **2917**

Method of calculating Integrals of the Form $J_{cs} = \int_0^{\pi} \frac{\cos k\sqrt{\lambda^2+\alpha^2}}{\sqrt{\lambda^2+\alpha^2}} \sin p\lambda \, d\lambda$.—G. Soulé-Nan & J. Peltier. (*C. R. Acad. Sci., Paris*, 4th June 1951, Vol. 232, No. 23, pp. 2076–2078.) The integrals discussed occur in calculations of the current distribution in aerials.

621.396.67 : 621.397.6 **2918**

Engineering a Super-gain TV Antenna.—M. E. Hiehle. (*TV Engng, N.Y.*, May 1951, Vol. 2, No. 5, pp. 16–18..28.) Omnidirectional aerials with power gains $\geqslant 10$ relative to a dipole and radiating almost entirely in the horizontal plane raise special problems in respect of reception close to the aerial and the effect of tower sway. Methods of overcoming these effects and of filling up 'holes' in the coverage area are outlined.

621.396.67 : 621.397.6 **2919**

Practical Considerations in the Use of Television Superturnstile and Super-gain Antennas.—H. E. Gihring. (*RCA Rev.*, June 1951, Vol. 12, No. 2, pp. 159–176.) Some general considerations concerning vertical directivity, horizontal polar diagram, bandwidth and the use of common aerials for sound and vision transmission are presented. The Empire State aerial system, in which four 'super-gain' aerials connected to separate television transmitters in the building below are stacked vertically on one mast, is discussed in detail.

621.396.67.029.64 **2920**

Horizontally Polarized Omnidirectional Antenna.—C. Brasse, Jr, & R. Thomas. (*Electronics*, July 1951, Vol. 24, No. 7, pp. 86–87.) Three co-phased horizontal loops mounted on a rigid coaxial line are used to provide a radiation pattern with an azimuth ratio <3 db in the 10-cm band. The array is enclosed in a hollow plexiglas ball for pressurizing. The vertical pattern has half-power points at 45°, giving a gain over a half-wave dipole of 2 db.

621.396.677 **2921**

Dielectric Aerials with Shaped Radiation Patterns.—D. G. Kiely. (*Wireless Engr*, June 1951, Vol. 28, No. 333, pp. 177–178.) An empirical technique is described for designing a solid-dielectric radiator for operation at a wavelength of 3·2 cm with a beam width of 240° to 6-db points. The method is applicable to aerials with other patterns.

621.396.677 **2922**

Slot Antenna Developments.—D. R. Rhodes. (*Radio & Televis. News, Radio Electronic Engng Supplement*, May & June 1951, Vol. 16, Nos. 5 & 6, pp. 3A–5A, 31A & 7–9..30.) A comprehensive, nonmathematical discussion, with a bibliography of 13 items.

621.396.677 **2923**

The Effects of Anisotropy in a Three-Dimensional Array of Conducting Disks.—G. Estrin. (*Proc. Inst. Radio Engrs*, July 1951, Vol. 39, No. 7, pp. 821–826.) The microwave delay-lens medium considered has both magnetic and electric anisotropy. To determine its refractive properties for obliquely incident waves, the field equations are subjected to a transformation making them applicable to a magnetically isotropic medium; the classical solutions from optics are then available. An inverse transformation is applied to give the 'ray velocity surfaces' in the original medium.

621.396.677 **2924**

Microwave Lenses.—K. S. Kelleher: J. Brown & S. S. D. Jones. (*Electronic Engng*, June 1951, Vol. 23, No. 280, pp. 236–237.) Discussion on 36 of January.

621.392 **2925**

Transmission Lines and Filter Networks. [Book Review]—J. Karakash. Publishers: Macmillan, New York, 1950, 413 pp., $6.00. (*Electronics*, April 1951, Vol. 24, No. 4, pp. 152, 278.) Elementary theory applicable from audio frequencies to the microwave range.

CIRCUITS AND CIRCUIT ELEMENTS

621.3.011.2 **2926**

Impedance and the Laplace Transform.—E. E. Ward. (*Wireless Engr*, June 1951, Vol. 28, No. 333, pp. 192–194.) An examination of the meaning of the term 'impedance' in the presence of transients, using the Argand diagram to simplify the presentation. The transient and steady-state responses of a linear system initially at rest are determined as special cases of the general theory.

621.3.015.7 **2927**

Sinusoid-Pulse and Pulse-Sinusoid Transformations.—J. Moline. (*Radio franç.*, Feb. 1951, No. 2, pp. 9–12.) The subject is discussed in general terms, and various circuit techniques are described for deriving waveforms of the one type from the other.

621.314.2 **2928**

Transformation Ratio and Leakage Distribution in Transformers with more than two Windings.—P. Wittich. (*Elektrotech. u. Maschinenb.*, 15th March 1951, Vol. 68, No. 6, pp. 157–159.) Expressions are derived for the value of the turns ratio corresponding to equal distribution of leakage loss in terms of the no-load characteristics of the individual windings.

621.314.2 **2929**

The Design and Performance of Double-Tuned Transformers in Tandem: an Application of Landon s Theorem.—R. G. Kitchenn. (*J. Brit. Instn Radio Engrs*, June 1951, Vol. 11, No. 6, pp. 227–232.) Theory is given for a simple type of band-pass filter in which the insertion loss in the pass band and that in the attenuated band are less than the values obtained using two similar double-tuned transformers isolated by a valve, for the same bandwidth. The performance of an eight-channel filter unit is described.

621.314.2 **2930**

Multi-Winding Transformers.—R. Willheim. (*Elect. Times*, 14th June 1951, Vol. 119, No. 3110, pp. 991–994.) The equivalent circuit of a multi-winding transformer is reduced to a T-type filter. The main application is to power transformers.

621.314.2 + 621.318.42].003.1 **2931**

Minimum-Co t Transformers and Chokes: Part 2—Various Alternative Solutions: the Economic Life of a Transformer.—H. C. Hamaker & T. Hehenkamp. (*Philips Res. Rep.*, April 1951, Vol. 6, No. 2, pp. 105–134.) Continuation of 1853 of August, dealing with two further classes of designs, viz. (*a*) those giving minimum cost and (*b*) those giving minimum losses, for prescribed values of the power and of the product of peak magnetic-flux density and effective current strength. The three classes of designs are compared. The problem is considered of designing a transformer such that its cost, plus the cost of the electrical energy dissipated as heat during its life, is a minimum.

621.314.3† **2932**

Response of Saturable Reactor with Resistive Load.—H. F. Storm. (*Elect. Engng, N.Y.*, May 1951, Vol. 70, No. 5, p. 442.) Digest of a paper presented at the A.I.E.E. Winter General Meeting in New York, January 1951, and to be published in *Trans. Amer. Inst. elect. Engrs*, 1951, Vol. 70. The analysis considers a reactor with a core material having a rectangular magnetization curve, operating in the proportional region. The variation of the load current with change of control voltage, supply voltage and load resistance is exponential, with a single time constant.

621.317.35 : 517.512 **2933**

Decomposition of a Signal into Components in Cos².—J. Ville. (*Câbles & Transmission, Paris*, April 1951, Vol. 5, No. 2, pp. 126–135.) A mathematical analysis showing how a signal including only components of frequencies lower than a given value f, can be resolved into a series of elementary signals expressed in terms of $\cos^2$, all having the same frequency f, but different amplitudes and time origin. The time interval between two successive half-maximum values of each elementary signal is equal to $1/2f$ and the time separation between the peaks of two successive component signals is also equal to $1/2f$.

621.318.4(083.74) **2934**

Standardized Magnetic Circuits of the French P.T.T. Administration.—P. Andrieux. (*Câbles & Transmission, Paris*, April 1951, Vol. 5, No. 2, pp. 101–109.) A review of standards and specifications relating to inductors; dimensions of magnetic circuits and properties of materials used are summarized in tables. The performance of various types is described, with illustrative graphs.

621.318.572 **2935**

Modern Designs of Electronic Switches.—H. Boucke & H. Lennartz. (*Radio Mentor*, March 1951, Vol. 17, No. 3, pp. 129–133.) Circuit diagrams and descriptions are given of switching circuits for multiplex transmission on a single channel and for displaying a number of phenomena on a c.r.o. Methods include the phase-shift, multiple-frequency and step-voltage techniques. A diode circuit for switching the a.m. signal on a carrier, and its application in the determination of voltage distribution along an u.h.f. transmission line are outlined.

621.318.572 **2936**

Speed-Controlled Switch.—H. W. Kretsch & F. J. Walker. (*Electronics*, July 1951, Vol. 24, No. 7, pp. 112–113.) The output of a standard a.c. tachometer operates through a frequency-sensitive circuit to actuate the switch when a predetermined speed is attained.

621.318.572 **2937**

A Three State Flip-Flop.—K. C. Johnson: A. D. Booth & J. Ringrose. (*Electronic Engng*, June 1951, Vol. 23, No. 280, p. 237.) Discussion on 2367 of October.

621.319.4(083.74) **2938**

The Stability of Mica Standards of Capacitance.—G. H. Rayner & L. H. Ford. (*J. sci. Instrum.*, June 1951, Vol. 28, No. 6, pp. 168–171.) "The stability of the National Physical Laboratory substandard mica capacitors since their manufacture in 1932 is described, with special attention to the period 1944–1950."

621.392 **2939**

The Theory of Biconjugate Networks.—L. J. Cutrona. (*Proc. Inst. Radio Engrs*, July 1951, Vol. 39, No. 7, pp. 827–832.) The properties of such networks are:—(*a*) of the six possible transfer impedances only three are independent, one being infinite; (*b*) the magnitudes of the reflection coefficients at each resistance are equal; (*c*) the phase angles of the transfer impedances are not independent, but must satisfy certain relations. One form of waveguide network, the $7\lambda_g/2$ hybrid circle, is analysed in detail and the driving-point and transfer impedances are computed and plotted.

621.392 **2940**

Synthesis of Passive RC Networks with Gains Greater than Unity.—H. Epstein. (*Proc. Inst. Radio Engrs*, July 1951, Vol. 39, No. 7, pp. 833–835.) Known methods of synthesis are used for designing three-terminal net-

works having unity voltage gain at zero frequency and voltage gain greater than unity over a prescribed frequency band. Two examples illustrate the method.

621.392 : 512.831 **2941**

The Formation of Positive Definite Matrices.—M. Parodi. (*C. R. Acad. Sci., Paris*, 25th June 1951, Vol. 232, No. 26, pp. 2390–2392.) A new method is presented for determining the upper limit for small variations to which the elements of a matrix may be subjected in order that the matrix shall remain positive definite. The method is useful for determining the upper limit to the real parts of the roots of the equations for the natural frequencies of a network.

621.392 : 517.544.2 **2942**

Estimation of Probable Error in the Solution of a Finite-Difference Equation Approximating Dirichlet s Problem for Laplace's Equation in Electrical Networks.—M. P. Shura-Bura. (*C. R. Acad. Sci. U.R.S.S.*, 1st May 1951, Vol. 78, No. 1, pp. 21–24. In Russian.)

621.392.5 **2943**

A Note on a Bridged-T Network.—P. G. Sulzer. (*Proc. Inst. Radio Engrs*, July 1951, Vol. 39, No. 7, pp. 819–821.) A bridged-T network described by Honnell (2368 of 1940) for measurement of r.f. resistance is analysed and shown to be suitable for use as frequency-determining element of a resistance-tuned oscillator.

621.392.5 : 621.3.015.3 **2944**

Solution of Transients in Active Four-Terminal Networks.—H. Epstein. (*J. Franklin Inst.*, June 1951, Vol. 251, No. 6, pp. 607–616.) The advantages of using matrix and operational methods together for the solution of this problem are illustrated by applying the method to the example of a grounded-grid amplifier followed by a cathode follower with a pulse input.

621.392.5 : 621.396.611.3 **2945**

Resonant Circuits coupled by a Passive Four-Pole that may violate the Reciprocity Relation.—B. D. H. Tellegen & E. Klauss. (*Philips Res. Rep.*, April 1951, Vol. 6, No. 2, pp. 86–95.) A theoretical treatment having particular reference to the use of coupled tuned circuits as interstage networks in amplifiers. The circuit conditions for maximum transfer between input current and output voltage, for a given shape of resonance curve, are considered; these conditions do not coincide with those applying to circuits coupled by a passive quadripole satisfying the reciprocity relation.

621.392.52 **2946**

Filter Design Simplified.—B. Sheffield. (*Audio Engng*, May 1951, Vol. 35, No. 5, pp. 26..58.) The method previously outlined (2127 of September) is extended to the design of band-pass and band-stop filters and filter-type dividing networks.

621.396.6 **2947**

Component Miniaturization Techniques.—R. G. Peters. (*TV Engng, N.Y.*, June 1951, Vol. 2, No. 6, pp. 12–13, 29.) A summary of the properties of materials used in miniature capacitors and resistors.

621.396.6.002.2 **2948**

Mechanized Production and Unitized Construction.—R. G. Peters. (*TV Engng, N.Y.*, April 1951, Vol. 2, No. 4, pp. 18–20.) General discussion of techniques developed for increasing and cheapening production of electronic equipment.

621.396.6.002.2 **2949**

Auto-Sembly of Miniature Military Equipment.—S. F. Danko & S. J. Lanzalotti. (*Electronics*, July 1951, Vol. 24, No. 7, pp. 94–98.) Wiring is printed on an insulating base, most conveniently by the etching of copper-faced laminates. Holes are punched to take component leads, and all joints are made simultaneously using the one-shot solder-dip technique.

621.396.6.002.2 **2950**

Production Planning speeds Military Orders.—J.D.F. (*Electronics*, July 1951, Vol. 24, No. 7, pp. 82–85.) Mass-production methods practised by a U.S. manufacturer of electronic equipment are described with special attention to the organization of the wiring.

621.396.611.1 **2951**

Mathieu's Nonlinear Oscillator.—N. Minorsky. (*C. R. Acad. Sci., Paris*, 11th June 1951, Vol. 232, No. 24, pp. 2179–2180.) By applying the calculus of perturbations to Mathieu's nonlinear differential equation of the form $\ddot{x} + [1 + \epsilon (A - Cx^2) \cos 2t]x = 0$ it is shown that, to a first approximation, a stable periodic solution exists if A and C have the same sign.

621.396.611.21 **2952**

Piezoelectric Crystals in Flexural Vibration.—H. Keller. (*Wireless Engr*, June 1951, Vol. 28, No. 333, pp. 179–186.) "The values of the equivalent circuit elements of several flexural vibrating piezoelectric crystals, slabs, double-T-shaped plates, and double strips, are calculated from the effective stiffness and mass, and the electromechanical coupling."

621.396.611.4 **2953**

On the Theory of Electromagnetic Waves in Resonant Cavities.—H. B. G. Casimir. (*Philips Res. Rep.*, June 1951, Vol. 6, No. 3, pp. 162–182.) The formal analogy between the modes of oscillation of a cavity, the modes of oscillation of a network, and the oscillation of a simple LC circuit is emphasized. Perturbation theory is used to investigate a number of examples, including the determination of the h.f. properties of magnetic materials and the coupling of cavities by a hole in a partition. The zero-point energy of empty space is discussed.

621.396.611.4 **2954**

A Resonator for Metre and Decimetre Waves.—M. Magat & M. Bruma. (*C. R. Acad. Sci., Paris*, 25th June 1951, Vol. 232, No. 26, pp. 2413–2415.) A piston-type resonator has a tube of dielectric introduced between the inner and outer metal cylinders, to provide a capacitance in parallel with that due to the plane ends. The arrangement permits tuning without instability.

621.396.615 **2955**

RC Tuned Oscillators.—P. Kundu. (*J. Brit. Instn Radio Engrs*, June 1951, Vol. 11, No. 6, pp. 233–241.) A frequency-selective feedback network is used to obtain sinusoidal oscillations of good waveform, with frequencies from a few cycles to a few megacycles. The loop gain is not affected by frequency, and the frequency can be controlled by varying a single element of the network. The same system can also be used as a selective amplifier or as a rejection filter, by controlling the amount of reaction in the regenerative loop.

621.396.645 **2956**

Relations between Amplitudes of Harmonics and Intermodulation Frequencies in the Output from a Non-linear Amplifier or Mixer.—M. V. Callendar & S. Matthews. (*Electronic Engng*, June 1951, Vol. 23, No. 280, pp. 230–232.) The output from an amplifier (or mixer) is calculated for an input of two superposed sine waves of different frequencies, for an assumed nonlinear amplifier characteristic free from discontinuities. The coefficients of all the terms in the output are tabulated.

621.396.645 : 621.385.3 : 546.289 **2957**

Some Circuit Properties and Applications of *n-p-n* Transistors.—R. L. Wallace, Jr, & W. J. Pietenpol. (*Proc. Inst. Radio Engrs*, July 1951, Vol. 39, No. 7, pp. 753–767; *Bell Syst. tech. J.*, July 1951, Vol. 30, No. 3, pp. 530–563.) Preliminary studies of circuit performance show that the *n-p-n* transistor is a stable, high-gain, quiet amplifier of practical interest. The performance of a few early experimental units is analysed; details are given of the physical appearance and construction, static characteristics and variation of properties with operating point. General considerations and formulae are presented for the grounded-base stage, the grounded-emitter amplifier and the grounded-collector stage; collector cut-off in these stages, frequency response and noise are examined.

621.396.645 : 621.385.3 : 546.289 **2958**

Application of Germanium Triodes for the Amplification of Low- and Medium-Frequency Currents.—H. Salow. (*Fernmeldetech. Z.*, March 1951, Vol. 4, No. 3, pp. 103–106.) The value of power gain obtainable in a transistor circuit is derived from the impedance matrix of the quadripole represented by the resistance characteristics of the crystal, which are determined experimentally. Some performance figures for an experimental l.f. amplifier are given.

621.396.645.029.3 : 621.385.3 **2959**

A Comparison of Triodes and Beam-Tetrodes as Power Output Valves in Audio Amplifiers.—D. Bruckmann, W. S. Carey & D. J. Fuller. (*Trans. S. Afr. Inst. elect. Engrs*, Feb. 1951, Vol. 42, Part 2, pp. 65–66.) Further discussion of paper noted in 1123 of May.

621.396.822 **2960**

Limiting the Noise Spectrum in Oscillatory Circuits.—W. Böer. (*Ann. Phys., Lpz.*, 31st July 1950, Vol. 8, Nos. 1/2, pp. 87–92.) Continuation of an investigation by Feldtkeller (1714 of 1937). The noise in an oscillatory circuit is calculated as a function of the bandwidth of a succeeding amplifier. Noise voltage decreases with increasing circuit damping and increases with increasing relative bandwidth. Operation with least possible input damping is not necessarily advantageous in every case. The optimum ratio of C to L is discussed for special cases.

621.392 **2961**

Transmission Lines and Filter Networks. [Book Review]—Karakash. (See 2925.)

GENERAL PHYSICS

534.23 + 538.566 **2962**

Kirchhoff's Formula, its Vector Analogue, and Other Field Equivalence Theorems.—S. A. Schelkunoff. (*Commun. pure appl. Math.*, June 1951, Vol. 4, No. 1, pp. 43–59.) A detailed physical and mathematical discussion of the problem of calculating the fields associated with acoustic or electromagnetic horn radiators. Four field-equivalence theorems are proved for each case. The relations between these theorems and Kirchhoff's formula and its vector analogue are discussed; permissible and non-permissible methods of approximation are distinguished. The method of successive approximation cannot be applied to calculations based on Kirchhoff's formula, all the approximate forms being exactly identical. The conditions under which Kirchhoff's formula is consistent with Maxwell's equations are examined.

534.26 + 535.42 + 534.24 + 535.312 **2963**

Diffraction and Reflection of Pulses by Wedges and Corners.—J. B. Keller & A. Blank. (*Commun. pure appl. Math.*, June 1951, Vol. 4, No. 1, pp. 75–94.) Exact explicit solutions of the equations for two- and three-dimensional diffraction of pulses by wedges and corners are obtained using Busemann's conical-flow method and Luneberg's results on the propagation of discontinuities. The solutions for waves with arbitrary dependence of amplitude on time may be found using Duhamel's theorem.

535.214.6 + 538.6 **2964**

Photophoresis, Magnetophotophoresis, Magneto-Chemical Effect.—J. v. Harlem. (*Phys. Blätter*, 1951, Vol. 7, No. 3, pp. 110–113.) Review of investigations of these effects, particularly those made by Ehrenhaft, and their interpretation.

535.338.32 **2965**

A Study of Nuclear and Electronic Magnetic Resonance.—K. K. Darrow. (*Elect. Engng, N.Y.*, May 1951, Vol. 70, No. 5, pp. 401–404.) Survey of the history of the discovery and measurement of magnetic resonance in solids, liquids and gases. A simple outline of the theory of the phenomenon is given and its importance in the study of nuclear magnetic moments, crystal structure and relaxation times is mentioned. A practical application is the measurement of magnetic field strengths.

535.42 : 538.56 **2966**

Diffraction of Electromagnetic Waves by a Plane Wire Grating.—J. Shmoys. (*J. opt. Soc. Amer.*, May 1951, Vol. 41, No. 5, pp. 324–328.) "The problem of diffraction by a finite grating consisting of perfectly conducting wires of arbitrary cross section is formulated in terms of characteristic plane waves corresponding to the various order spectra defined in optics. Scattering matrix elements are expressed as stationary functionals of current distribution on the grating wires, for the incident wave falling at right angles to the grating elements and polarized either parallel or perpendicular to them. These are evaluated for the thin wire grating and parallel polarization."

537.122 : 537.217 **2967**

The Electrical Flywheel and Electron Inertia.—P. Selényi. (*Z. Phys.*, 28th May 1951, Vol. 130, No. 1, pp. 124–128.)

537.226.1 **2968**

The Dielectric Properties of Various Solid Crystalline Proteins, Amino Acids and Peptides.—S. T. Bayley. (*Trans. Faraday Soc.*, May 1951, Vol. 47, No. 341, pp. 509–517.) Details are given of experimental methods for determining the dielectric properties of organic powders at frequencies ranging from 300 to 4×10^9 c/s, over the temperature range $-100°$ to $0°C$.

537.226.1 **2969**

The Dielectric Properties of Adsorbed Water Layers on Inorganic Crystals.—S. T. Bayley. (*Trans. Faraday Soc.*, May 1951, Vol. 47, No. 341, pp. 518–522.) Adsorbed water causes peaks at about $-30°C$ in the variation with temperature of the dielectric constant and power factor of a number of inorganic crystal powders.

537.311.5 : 517.311.5 **2970**

The Discharge of a Series of Equal Condensers having Arbitrary Resistances connected in Parallel.—H. Bremmer. (*Philips Res. Rep.*, April 1951, Vol. 6, No. 2, pp. 81–85.) The flow of current through a ballistic galvanometer, through which the capacitors are discharged, is calculated by means of the operational calculus. The discussion is relevant to van Geel & Scholte's work on the electrical properties of Al_2O_3 layers (see 3022 below).

537.523.5 **2971**

A Technique for Arc Initiation.—H. Edels. (*Brit. J. appl. Phys.*, June 1951, Vol. 2, No. 6, pp. 171–174.) Discussion of a method in which fixed electrodes and an auxiliary spark discharge are used.

537.525 : 621.385.13 **2972**

Rapid Determination of Gas Discharge Constants from Probe Data.—L. Malter & W. M. Webster. (*RCA Rev.*, June 1951, Vol. 12, No. 2, pp. 191–210.) A series of nomograms for determination of plasma density, wall potential, etc.; an analysis of the space-charge conditions is appended.

537.525.4 **2973**

Influence of Cathode Surface Layers on Minimum Sparking Potential of Air and Hydrogen.—F. L. Jones & D. E. Davies. (*Proc. phys. Soc.*, 1st May 1951, Vol. 64, No. 377B, pp. 397–404.)

537.525.6 : 538.56 **2974**

Current Fluctuations in the Direct-Current Gas Discharge Plasma.—P. Parzen & L. Goldstein. (*Phys. Rev.*, 1st June 1951, Vol. 82, No. 5, pp. 724–726.) The noise power from the gas-discharge plasma, which is ascribed to the electron-current fluctuations due to collisions with atoms or ions, is recognized to be the sum of two parts, one determined by the thermal velocities (characterized by the electron temperature) and the other by the average direct current.

537.525.6 : 538.56] : 537.122 **2975**

A Collective Description of Electron Interactions: Part 1 — Magnetic Interactions.—D. Bohm & D. Pines. (*Phys. Rev.*, 1st June 1951, Vol. 82, No. 5, pp. 625–634.) The 'collective' description of the behaviour of electrons in a plasma is developed for presenting the long-range correlations in electron positions brought about by their mutual interaction. "The transition from the usual single-particle description to the collective description of the electron motion in terms of organized oscillations is obtained by a suitable canonical transformation. The complete hamiltonian for a collection of charges interacting with the transverse electromagnetic field is re-expressed as a sum of three terms. One involves the collective field coordinates and expresses the degree of excitation of organized oscillations. The others represent the kinetic energy of the electrons and the residual particle interaction, which is not describable in terms of the organized oscillations, and corresponds to a screened interparticle force of short range. Both a classical and a quantum-mechanical treatment are given, and the criteria for the validity of the collective description are discussed."

537.71 **2976**

Fundamental and Derived Magnitudes.—R. W. Pohl. (*Naturwissenschaften*, June 1951, Vol. 38, No. 11, pp. 247–248.) A short discussion whose object is to clear up existing confusion concerning the definitions of physical magnitudes.

538.221 **2977**

Antiferromagnetism —R. Street. (*Sci. Progr.*, April 1951, Vol. 39, No. 154, pp. 258–281.) The behaviour of ferrimagnetic and antiferromagnetic materials is discussed and an account is given of recent research.

538.311 : 621.318.423 : 513.647.1 **2978**

General Expression for the Electromagnetic Field of a Helix.—É. Roubine. (*C. R. Acad. Sci., Paris*, 18th June 1951, Vol. 232, No. 25, pp. 2297–2298.) Expressions previously derived (2691 of November) are applied to the case of an infinitely thin wire, considered as the limit, when the width tends to zero, of an infinitely thin helically wound ribbon.

538.566 : 537.562 **2979**

Derivation of the Dispersion Equation for Alfvén's Magneto-hydrodynamic Waves from Bailey's Electro-magneto-ionic Theory.—J. W. Dungey. (*Nature, Lond.*, 23rd June 1951, Vol. 167, No. 4260, pp. 1029–1030.) An analysis is presented which relates the work of Alfvén (2777 of 1950) and his collaborators to that of Bailey (2785 of 1949). As well as giving the dispersion of the waves, Bailey's theory may be useful for studying turbulence in an ionized gas in a magnetic field by means of Fourier components.

538.61 : 621.392.26† **2980**

Magneto-optics of an Electron Gas with Guided Micro-waves.—Goldstein, Lampert & Heney. (See 2911.)

537/538 **2981**

Électricité. [Book Review]—Y. Rocard. Publishers: Masson & Cie, Paris, 1800 Fr. (paper), 2200 Fr. (bound). (*Engineering, Lond.*, 18th May 1951, Vol. 171, No. 4451, p. 585.) A treatise based on a course of lectures given at the Sorbonne in 1941–1942, but including later material, e.g., double-stream amplifier valves, up to 1949. A chapter on the transmission of radio waves is included.

539 **2982**

Theory of Electrons. [Book Review]—L. Rosenfeld. Publishers: North-Holland Publishing Co., Amsterdam, 1951, 120 pp., 7.50 florins. (*Nature, Lond.*, 30th June 1951, Vol. 167, No. 4261, p. 1044.) A discussion of the fundamental principles relating the macroscopic electrical and magnetic properties of matter to the behaviour of individual atoms and molecules.

GEOPHYSICAL AND EXTRATERRESTRIAL PHENOMENA

523.72 : 550.38 **2983**

Correlation of Geomagnetic Activity with [passage of] **Centres of Solar Activity distinguished according to their Radio Properties.**—J. F. Denisse, J. L. Steinberg & S. Zisler. (*C. R. Acad. Sci., Paris*, 18th June 1951, Vol. 232, No. 25, pp. 2290–2292.) Based on observations recorded at Meudon since 1948, on a frequency of 158 Mc/s, centres of solar activity are classed as radio-emissive or otherwise according to an index depending both on the mean level of radio intensity and on the extent of fluctuations. Graphs of mean-intensity/time for the two types are compared with graphs of magnetic-intensity/time; a peak of magnetic intensity occurs at 1–2 days after the radio peak corresponding to the passage of the radio-emissive centre across the sun's central meridian, whereas a trough of magnetic intensity occurs 2–3 days after the passage of the non-radio-emissive centre.

523.72 : 621.396.822 **2984**

A Study on the Solar Noise at 3 300 Mc/s.—M. Oda & T. Takakura. (*J. phys. Soc. Japan*, May/June 1951, Vol. 6, No. 3, p. 202.) A preliminary note. Observations from April to October 1950 indicate that intensity of noise is approximately proportional to the whole-disk sunspot number; the apparent period of fluctuation averages about 20 min and is independent of the intensity; and the mean fluctuation of the intensity is approximately proportional to the square root of the intensity. These conclusions are briefly discussed.

523.72 : 621.396.822 **2985**

The F-Radiation of the Sun.—O. Burkard. (*Acta phys. austriaca*, May 1947, Vol. 1, No. 1, pp. 98–102.) Use is

made of the critical frequencies of the ionosphere F_2 layer to calculate the magnitude of a parameter which is a measure of the particular component of the solar radiation producing the ionization of the F_2 layer. The mean monthly values of this radiation at Kochel (near Munich) over the period 1940–1944 are given; there is a 97% correlation between these figures derived from ionosphere observations and the optically estimated character figures for the *Ca*-flocculi.

523.72 : 621.396.822 **2986**

Source Points of Radio Noise Bursts associated with Solar Flares.—M. A. Ellison. (*Nature, Lond.*, 9th June 1951, Vol. 167, No. 4258, pp. 941–942.) It has been shown that the solar sources of enhanced radio noise at metre wavelengths observed at times of intense solar flares may travel some hundreds of thousand kilometres outwards from the photosphere in a period of a few minutes. Visible disturbances have been found to move in a similar way, suggesting that the visible and radio phenomena are closely related.

523.72 : 621.396.822 **2987**

Distribution of Radiation across the Solar Disk at a Frequency of 81 5 Mc/s.—K. E. Machin. (*Nature, Lond.*, 2nd June 1951, Vol. 167, No. 4257, pp. 889–891.) The distribution was measured by studying the variations in the received noise as the sun crossed the interference pattern of several coupled widely-spaced aerial systems. A technique was developed which allowed for the fluctuating noise from sunspots. Results are compared with values predicted according to Smerd's theory (344 of February).

523.745 : 550.385 **2988**

Geomagnetic Effects of Solar Flares.—D. H. McIntosh. (*Nature, Lond.*, 16th June 1951, Vol. 167, No. 4259, p. 985.) Observations at Lerwick and Eskdalemuir of the vertical component of the earth's magnetic field during flares are interpreted as indicating substantial differences between the space distribution of the ionospheric currents producing the geomagnetic effects of flares and those producing the normal daily magnetic variations. See also 1910 of 1950 (Newton).

523.841.2 : 538.12 **2989**

Cosmic Radiation and Cosmic Magnetic Fields: Part 2—Origin of Cosmic Magnetic Fields.—L. Biermann & A. Schlüter. (*Phys. Rev.*, 15th June 1951, Vol. 82, No. 6, pp. 863–868.) The equations governing the behaviour of a wholly or partly ionized gas moving in the presence of a magnetic field are given. Modifications are necessary when the conducting medium is turbulent. The results are considered in relation to the fields in our galaxy. Part 1: 2990 below.

523.854 : 621.396.822] + 537.591 **2990**

Cosmic Radiation and Cosmic Magnetic Fields: Part 1—Origin and Propagation of Cosmic Rays in our Galaxy.—A. Unsöld. (*Phys. Rev.*, 15th June 1951, Vol. 82, No. 6, pp. 857–863.) The r.f. radiation of the galaxy is shown to be analogous not to the 'quiet' but to the 'disturbed' radiation from the sun, which is probably produced by plasma oscillations. It originates in stars for which the relation between r.f. radiation and cosmic rays is similar to that observed for the sun by Forbush and Ehmert. The propagation of cosmic radiation in the galaxy is discussed in relation to the observed directional isotropy of cosmic rays. Other theories of cosmic rays are discussed critically. Part 2: 2989 above.

537.591 **2991**

Variations and Origin of Cosmic Radiation.—A. Dauvillier. (*Cah. Phys., Paris*, Jan./March 1951, Nos. 35/36, 78 pp.) Study of periodic variations based on past observations and a discussion of explanatory theories.

537.591 : 551.594.5 **2992**

Correlation of Auroras with Increased Cosmic Ray Intensities (November 19, 1949).—N. C. Gerson. (*Nature, Lond.*, 2nd June 1951, Vol. 167, No. 4257, pp. 894–895.) A summary of the visual, cosmic-ray and radio phenomena observed during a solar disturbance. It is concluded that the cosmic-ray particles were charged and that the auroras may have been caused by charged particles of lower energy.

550.385 + 551.594.5 **2993**

The Theory of Magnetic Storms and Auroras.—H. Alfvén : D. F. Martyn. (*Nature, Lond.*, 16th June 1951, Vol. 167, No. 4259, pp. 984–985.) Critical comment on 1374 of June, and author's reply.

550.385 + 551.594.5] : 621.396.11 **2994**

Aurora and Magnetic Storms.—R. K. Moore. (*QST*, June 1951, Vol. 35, No. 6, pp. 14–19, 110.) Discussion of the nature of ionospheric disturbances and their effects on radio communication.

551.510.535 **2995**

Formation of Ionized Layers: Effect of Temperature.—P. Lejay & D. Lepechinsky. (*C. R. Acad. Sci., Paris*, 4th June 1951, Vol. 232, No. 23, pp. 2058–2061.) Chapman's theory of photo-ionization of a gas of density decreasing exponentially with increasing height assumes a constant temperature. A simple analysis shows that when the mean temperature rises the level of the maximum ionization layer also rises, while the maximum ionization intensity I_0 decreases. Families of curves showing the variation of relative height with I/I_0 are given for three different values of mean temperature. For a given height and zenithal angle the ionization intensity is very sensitive to temperature variation. The thickness of the ionized layer increases with temperature rise. Variations of the characteristics of the F layer with season and with time of day predicted from the foregoing results are in agreement with observations. The theory affords an explanation of the ionization intensity minimum observed around midday particularly in summer.

551.510.535 **2996**

The Ionosphere during the Partial Eclipse of the Sun on 28th April 1949.—D. Stranz. (*Z. Naturf.*, March 1950, Vol. 5a, No. 3, pp. 172–173.) Observations made at Gothenburg, Lindau and Tromsö are reported. Increases of the hourly F-layer critical frequencies as compared with the median monthly values were observed at all three stations, the deviation at Gothenburg amounting to 4 Mc/s at the maximum phase of the eclipse. Possible physical explanations are discussed briefly; the increase in charge density may be due to lowering of the temperature.

551.510.535 **2997**

Anomalous Ionospheric Soundings observed during the Voyage of the 'Commandant Charcot' to Adélie Land.—M. Barré & K. Rawer. (*Rev. sci., Paris*, July/Sept. 1950, Vol. 88, No. 3307, pp. 147–154.) An account of observations taken between Hobart and Adélie Land, from 20th December 1949 to 20th February 1950. In general, ionospheric conditions were quiet throughout the period, except for a violent ionospheric storm in the first week of February and sudden short disturbances of the Mögel-Dellinger type. Soundings were made with standard gear of the Service de Prévision Ionosphérique Militaire. Anomalous results are classified under eight heads, referring to the form of the curves obtained by reflection in the normal layers, the occurrence of E_s layers of various

characteristics, and other effects. They were observed mainly during quiet periods, tending to disappear during periods of high absorption; they disappeared completely during the storm of 1st 6th February 1950. They appear to be due to the heterogeneity and turbulence of the ionosphere in the Antarctic, caused by the incidence of corpuscular radiation; but so-called 'vertical' soundings are unreliable in the vicinity of the magnetic pole, particularly in the case of the ordinary ray, and there is as yet no completely satisfactory explanation. See also 112 of January.

551.510.535 **2998**

Abnormal E-Region Ionization.—N. C. Gerson. (*Canad. J. Phys.*, May 1951, Vol. 29, No. 3, pp. 251–261.) The movement and extent of sporadic-E clouds over North America were determined by oblique-incidence radio observations. On 13th June 1949 two E_s centres were observed; the first developed rapidly until it included an area of over 10^6 km^2; the second was much smaller. The velocity of the centre of mass of the first area was about SE 100 km/hour, and of the second SSE 270 km/hour. Drift velocities in the ionosphere obtained by other investigators are of about this order of magnitude.

551.510.535 + 551.51] : 523.7 **2999**

Geophysical and Meteorological Changes in the Period January–April 1949.—W. J. G. Beynon & G. M. Brown. (*Nature, Lond.*, 23rd June 1951, Vol. 167, No. 4260, pp. 1012–1014.) Abnormally great cyclical variations in the ground pressure and E- and F-region ionization densities over southern England were found during the period January–April 1949. These were closely connected with solar and magnetic activity. A summary of similar phenomena reported elsewhere is included.

551.510.535 : 621.396.11 **3000**

Approximate Expressions for the Refractive Index of an Ionized Medium acted upon by the Earth's Magnetic Field.—Argence. (See 3094.)

551.578.11 **3001**

A Balloon-Borne Instrument for Telemetering Raindrop-Size Distribution and Rainwater Content of Cloud.—B. F. Cooper. (*Aust. J. appl. Sci.*, March 1951, Vol. 2, No. 1, pp. 43–55.) Each drop impinges on a microphone, and the resulting impulse modulates a transmitter. The amplitudes of the impulses are analysed and the distribution of drop size determined. Total rainwater content is measured simultaneously in a similar system by catching drops in a funnel before they reach the microphone. This ensures that small drops which do not produce an impulse are taken into account. Experimental soundings are described.

LOCATION AND AIDS TO NAVIGATION

621.396.9 **3002**

Resolution in Radar Systems.—J. Freedman. (*Proc. Inst. Radio Engrs*, July 1951, Vol. 39, No. 7, pp. 813–818.) The resolution is shown to be related to aerial beam-width and hence to size of aperture. The limitations on the improvement of resolution are presented from two aspects; firstly, from considerations associated with attempts to build a super-gain aerial; and secondly, from considerations of filter equalization techniques. In practice no appreciable improvement is obtainable with either of these methods.

621.396.9 : 523.5 **3003**

A Radio Echo Apparatus for the Delineation of Meteor Radiants.—A. Aspinall, J. A. Clegg & G. S. Hawkins. (*Phil. Mag.*, May 1951, Vol. 42, No. 328, pp. 504–514.) A description of apparatus for the continuous recording of 72-Mc/s radio echoes from meteor ionization, using Yagi arrays directed on two bearings differing by 50°. Returned pulses are displayed on an intensity-modulated trace, calibrated in echo range. From the times of observation of maximum ranges on the two aerial systems, the co-ordinates of active meteor radiants may be obtained. Typical results obtained on the Geminid showers of 1949 and 1950 are illustrated. An examination is made of the accuracy and resolving power of the equipment, and radiants are classified according to their echo properties.

621.396.9 : 621.396.621 **3004**

A Simple Logarithmic Receiver.—Croney. (See 3096.)

621.396.933 **3005**

Air Navigational Aids.—B. Clarke. (*Wireless World*, Aug. 1951, Vol. 57, No. 8, pp. 329–331.) A brief survey of the systems in current use. Those mentioned are (*a*) long-range: loran and consol; (*b*) medium-range: American radio range (300–400 kc/s), Gee, Decca, and V.O.R.; (*c*) local: British S.B.A. and American S.C.S.-51 landing beam systems, G.C.A. (or P.A.R.) and S.R.E.; (*d*) miscellaneous: m.f. beacons, cloud and collision-warning radar, altimeters, and D.M.E.

621.396.933 **3006**

Experimental Results of Continuous-Wave Navigation Systems.—F. S. Howell. (*Proc. Inst. Radio Engrs*, July 1951, Vol. 39, No. 7, p. 841.) Operational tests on Raydist equipment showed that reradiation and two-path transmission effects might cause erroneous position measurements in a system depending on c.w. phase-angle measurements. Two simple precautions against such errors are recommended.

621.396.933 **3007**

Prevention of Echo Interference in Double-Pulse Coded Interrogator-Responder Systems.—R. S. Styles. (*Aust. J. appl. Sci.*, March 1951, Vol. 2, No. 1, pp. 26–42.) A method of echo suppression is proposed based on an instantaneous a.g.c. system having a recovery time-constant of 30 μs. This effectively suppresses the echoes following the main pulses while passing the pulses themselves. Tests made near Sydney with prototype equipment are described.

621.396.933 **3008**

Ultrasonics in the Loran Trainer.—P. D. Stahl. (*Audio Engng*, May & June 1951, Vol. 35, Nos. 5 & 6, pp. 13–14, 53 & 14–16.) A device is described for the classroom training of navigators. An outline is given of the actual loran system operating at about 2 Mc/s. To scale down a large ground area an ultrasonic frequency of 175 kc/s is used in the model, the transmitting stations being represented by oil-damped crystal tranducers. Details of the transmitter channel including the method of simulating sky-wave splitting are given.

621.396.933 **3009**

Air Safety Measures at the Intercontinental Airport of Zürich-Kloten.—A. Fischer. (*Tech. Mitt. schweiz. Telegr.-TelephVerw.*, 1st March 1951, Vol. 29, No. 3, pp. 86–92. In German.) An account of the approach and I.L.S. facilities available.

621.396.933 : 621.396.621.089.6 **3010**

A New Method of Testing the Mark V Decca Navigator Receiver in High Noise Levels.—Hewitt. (See 3062.)

621.396.9 **3011**

Principles and Practice of Radar. [Book Review]—H. E. Penrose & R. S. H. Boulding. Publishers: Newnes, London, 3rd edn 1950, 708 pp., 42s. (*Electronic Engng*, June 1951, Vol. 23, No. 280, p. 241.) "In order to make

the third edition as up to date as possible the authors have fully considered microwaves and the particular problems met with at these wavelengths."

MATERIALS AND SUBSIDIARY TECHNIQUES

533.583 : 621.385.1 **3012**

Efficiency and Mechanism of Barium Getters at Low Pressures.—S. Wagener. (*Brit. J. appl. Phys.*, May 1951, Vol. 2, No. 5, pp. 132–138.) The gettering rates of Ba getters for O, N, H, CO, CO_2 and water vapour are measured in the pressure range 5×10^{-8}–5×10^{-5} mm Hg. Values for the decay in gettering rate during use of the getter are given. The gettering effect at these low pressures is almost entirely due to the take-up of atoms or metastable molecules produced by the impact of electrons on the stable gas molecules, ions playing a negligibly small part. The influence of the position of the getter is investigated.

537.311.33 **3013**

Rectifying Effect in Thin, Asymmetrically Illuminated Semiconductor Layers.—G. Wlérick. (*C. R. Acad. Sci., Paris*, 11th June 1951, Vol. 232, No. 24, pp. 2199–2201.) Amirkhanoff investigated asymmetrical conduction in semiconductors, in the vicinity of electrodes, due to geometrical, chemical and thermal causes (2601 of 1946). The present work is a study of conduction in a semiconductor/metal two-contact system with one contact illuminated and the other unilluminated. The semiconductor is a thin layer of CdS on a glass base and the contacts are gold. The asymmetrical illumination is found to reduce the thickness of the semiconductor/metal barrier while increasing the contact difference of potential. An internal barrier arises at the boundary of the illuminated area; this, together with the contacts, causes the rectification.

537.311.33 **3014**

The Parameters of Simple Excess Semiconductors.—P. T. Landsberg, R. W. Mackay & A. D. McRonald. (*Proc. phys. Soc.*, 1st May 1951, Vol. 64, No. 377A, pp. 476–480.) Curves are given for the concentration of conduction electrons, the reduced Fermi level and the concentration of available impurity-bound electrons, as functions of absolute temperature.

537.311.33 **3015**

The Combination of Resistivities in Semiconductors.—V. A. Johnson & K. Lark-Horovitz. (*Phys. Rev.*, 15th June 1951, Vol. 82, No. 6, pp. 977–978.) Confirms Jones's analysis (1357 of June) of the resistivity and Hall coefficient of a semiconductor in which scattering is due to both lattice ions and impurity ions. Experimental evidence suggests that other types of scattering may also be significant.

537.311.33 **3016**

Temperature Dependence of the Energy Gap in Semiconductors.—H. Y. Fan. (*Phys. Rev.*, 15th June 1951, Vol. 82, No. 6, pp. 900–905.) Lattice vibrations in semiconductors are assumed to produce a shift of the energy levels, resulting in variation of the energy gap with temperature. The quantitative results predicted according to the theory are compared with those given by earlier theories.

538.221 **3017**

Coercive Field of Ferro-Nickel Powders: Influence of Compression and Heat Treatment.—L. Weil. (*J. Phys. Radium*, April 1951, Vol. 12, No. 4, pp. 520–526.) Experimental study of the variation of the coercive field at temperatures between +300° and −193°C as a function of the agglomeration structure. Without heat treatment the field conforms to Néel's theory (3151 of 1947). After heat treatment the value of the field decreases as the measurement temperature is increased. This is ascribed to displacement of the Bloch walls formed by certain grains in contact.

538.221 **3018**

The Saturation Magneto-Resistance of Ferromagnetic Alloys.—R. Parker. (*Proc. phys. Soc.*, 1st May 1951, Vol. 64, No. 377A, pp. 447–452.) It is suggested that the magnetoresistance coefficient of a ferromagnetic alloy is composed of two terms, one associated with the temperature-dependent, the other with the temperature-independent contribution to the electrical resistivity. An equation based on this hypothesis is in good agreement with the experimental results for silicon-iron alloys. The validity of the equation for other alloys is discussed.

538.221 **3019**

Investigation of Magnetic Properties of Well Ordered Alloys of the Co/Mn System.—F. Gal'perin. (*C. R. Acad. Sci. U.R.S.S.*, 21st April 1951, Vol. 77, No. 6, pp. 1011–1014. In Russian.)

538.652 : [546.74 : 548.55 **3020**

A Phenomenological Derivation of the First- and Second-Order Magnetostriction and Morphic Effects for a Nickel Crystal.—W. P. Mason. (*Phys. Rev.*, 1st June 1951, Vol. 82, No. 5, pp. 715–723.) Report of a phenomenological investigation of the stress, strain and magnetic relations for single Ni crystals, undertaken to account for experimental results obtained by McSkimin (2844 of 1950) showing that the saturation elastic constants of a single Ni crystal vary with direction of magnetization.

546.289 : 539.23 **3021**

The Electrical Properties of Thin Germanium Layers.—J. M. Dunoyer. (*J. Phys. Radium*, May 1951, Vol. 12, No. 5, pp. 602–606.) Layers about 1 μ thick obtained by evaporation in vacuo were of two kinds: (*a*) amorphous layers having resistances of the order of a megohm at ambient temperature, and (*b*) crystalline layers of resistance not greater than a few tens of ohms. In both cases rectified power is very small. Type (*a*) is obtained with the support at a temperature <270°C during deposition, type (*b*) above about 370°C. Composite layers consisting of an amorphous layer superimposed on a crystalline one gave greater rectified power, but results varied very widely from one sample to another.

546.623-31 : 621.3.011.4/.5 : 621.319.45 **3022**

Capacitance and Dielectric Losses of a Layer of Oxide deposited on Aluminium by Anodic Oxidation.—W. C. van Geel & J. W. A. Scholte. (*Philips Res. Rep.*, Feb. 1951, Vol. 6, No. 1, pp. 54–74. In French.) Based on bridge measurements at frequencies up to 30 kc/s of the capacitance and dielectric loss, and ballistic measurements of capacitance, a circuit equivalent for the structure of an oxide layer on Al is proposed, consisting of a number of parallel-RC circuits in series, the capacitances having the same value in each element while the resistances increase steadily through the layer. An explanation in terms of an electrochemical process is advanced.

548.0 : 537 **3023**

Dielectric Properties of Sodium and Potassium Niobates.—B. T. Matthias & J. P. Remeika. (*Phys. Rev.*, 1st June 1951, Vol. 82, No. 5, pp. 727–729.) Both substances are ferroelectric. The temperatures at which they undergo crystallographic changes, and the corresponding changes in dielectric constant and loss tangent are reported. Dielectric-hysteresis loops and values of saturation polarization for $KNbO_3$ at points in the temperature range 220°C–472°C are given.

548.0 : 549.514.51 **3024**

Growth of Large Quartz Crystals.—C. S. Brown, R. C. Kell, L. A. Thomas, N. Wooster & W. A. Wooster. (*Nature, Lond.*, 9th June 1951, Vol. 167, No. 4258, pp. 940–941.) Details are given of an experimental temperature-gradient process. Values of some physical properties of the synthesized crystals were compared with those for natural Brazilian crystals; no difference was observed.

620.193.82 **3025**

Effect of Fungus Growth on the Tensile Strength of Pressure-Sensitive Electrical Insulating Tapes.—S. Berk & L. Teitell. (*ASTM Bull.*, May 1951, No. 174, pp. 67–71.)

621.314.63 **3026**

Application of the Image-Force Model to the Theory of Contact Rectification and of Rectifier Breakdown.—E. Billig. (*Proc. roy. Soc. A*, 22nd June 1951, Vol. 207, No. 1089, pp. 156–181.) The basic assumptions of the current-diffusion theory of rectification are examined. A curved potential barrier at the rectifying junction is assumed, to explain the behaviour with high inverse voltages. The theory is applied to the case of the Se plate rectifier and shown to give results in good agreement with experiment. Useful rectifying junctions can only be made up from materials combining a reasonably high barrier with a fairly low electronic conductivity of the semiconductor.

621.315.615.011.5 **3027**

The Dielectric Dispersion of Dioxan-Water Mixtures.—J. B. Hasted, G. H. Haggis & P. Hutton. (*Trans. Faraday Soc.*, June 1951, Vol. 47, No. 342, pp.577–580.) Measurements are reported of the properties of dioxan-water mixtures, up to 45% dioxan, at wavelengths of 9·22 and 1·26 cm. The single relaxation time of water is raised from 0·83 to $1{\cdot}43 \times 10^{-11}$ sec when 45% dioxan is added, while the static dielectric constant falls linearly, giving a molar decrement of −7·7. Energy of activation of relaxation is 20% lower than that of pure water.

621.359.3 **3028**

Applying Coatings by Electrophoresis.—S. A. Troelstra. (*Philips tech. Rev.*, April 1951, Vol. 12, No. 10, pp. 293–303.) The mechanism of electrophoresis (transportation by an electric field of a particle in a colloidal solution or in suspension) is explained and analysed. The process differs from electroplating in that insulating substances can be deposited. Stability of suspensions, formation of double layers, and theoretical rate of build-up are analysed, and the effect of added electrolyte and pitting due to liberated gases are considered. The coating on the electrode resembles sediment deposited by gravity. The process is used in the manufacture of valve filaments and cathodes.

621.793.1 **3029**

Evaporation in Vacuo by Direct Bombardment using an Electron Gun.—J. Brochard, P. Giacomo, P. Jacquinot & S. Roizen. (*J. Phys. Radium*, May 1951, Vol. 12, No. 5, p. 632.) The method avoids attack on the support by the substance to be evaporated. A slight modification enables non-conducting substances, e.g., silicon and refractory oxides, to be treated.

621.924 **3030**

Making Small Spheres.—W. L. Bond. (*Rev. sci. Instrum.*, May 1951, Vol. 22, No. 5, pp. 344–345.) A 'spinning' method is described, capable of producing in a few minutes spheres of diameter 0·100–0·004 in., of Ge, EDT, nickel ferrite, etc.

666.1 : 621.317.374 **3031**

Some Experiments and Theories on the Power Factor of Glasses as a Function of their Composition: Part 2.—J. M. Stevels. (*Philips Res. Rep.*, Feb. 1951, Vol. 6, No. 1, pp. 34–53.) Presentation and discussion of information about the structure of glass, obtained from dielectric-constant and power-factor measurements of glasses with graded compositions, at a frequency of 1·5 Mc/s. Part 1: 3075 of 1950.

666.1.037 : 539.319 **3032**

A Theory of Stresses in Glass Butt Seals.—H. Rawson. (*Brit. J. appl. Phys.*, June 1951, Vol. 2, No. 6, pp. 151–156.) A series of equations are derived for the calculation of stresses between materials of different expansion coefficients in butt-type and graded seals. Stress determinations made by the photoelastic method are in good agreement with theoretical values.

669.245 : 621.385.032.216 **3033**

Nickel Alloys for Oxide-Coated Cathodes.—A. M. Bounds & T. H. Briggs. (*Proc. Inst. Radio Engrs*, July 1951, Vol. 39, No. 7, pp. 788–799.) The metallurgy of Ni and the methods of manufacturing cathodes are reviewed. Four valve parameters are defined, viz., rate of free Ba evolution, rate of activation, rate of sublimation, and interface impedance; the influence of the Ni-alloy composition on these parameters is examined. Suggestions are made for developing cathode materials to meet the severer demands likely to be imposed in future.

MATHEMATICS

517.37 : 538.566 **3034**

Extension of Weyl's Integral for Harmonic Spherical Waves to Arbitrary Wave Shapes.—H. Poritsky. (*Commun. pure appl. Math.*, June 1951, Vol. 4, No. 1, pp. 33–42.) Analysis relevant to the propagation of radio waves generated by a dipole near a flat earth is presented.

517.564.4 **3035**

Vector Wave Functions.—R. D. Spence & C. P. Wells. (*Commun. pure appl. Math.*, June 1951, Vol. 4, No. 1, pp. 95–104.) A discussion of the problem of finding spheroidal solutions of the vector wave equation. The solutions cannot be orthogonal and hence it appears preferable to use the orthogonal set of scalar solutions; this also involves serious difficulties. The boundary conditions for spheroidal cavities and radiators are complex, since the TE and TM modes do not separate as in the spherical or cylindrical cases. Solutions are only practicable in the case of azimuthal symmetry, i.e., for circularly symmetrical fields. Other methods of dealing with the problem are discussed briefly.

517.93 **3036**

Note on Levinson's Existence Theorem for Forced Periodic Solutions of a Second Order Differential Equation.—C. E. Langenhop. (*J. Math. Phys.*, April 1951, Vol. 30, No. 1, pp. 36–39.) Comment on paper noted in 2069 of 1944.

681.142 : 621.3 **3037**

Applications of a Mechanical Differential Analyzer to Electrical Engineering.—E. Janssen & D. Lebell. (*Elect. Engng, N.Y.*, May 1951, Vol. 70, No. 5, pp. 432–435.) The basic components of a differential analyser and their mathematical functions are discussed, and application to magnetic amplifiers, pulse transformers and particle trajectories in accelerators is described.

501 **3038**

Mathematical Engineering Analysis. [Book Review]—R. Oldenburger. Publishers: Macmillan, New York,

1950, 414 pp., $6.00. (*Proc. Inst. Radio Engrs*, July 1951, Vol. 39, No. 7, p. 849.) "A large portion of the field of mathematical physics is covered. . ."

517.942.82 : 621.3 **3039**

Laplace Transformation Theory and Engineering Applications. [Book Review]—W. Tyrrell. Publishers: Prentice-Hall, New York, 1950, 230 pp., $3.75. (*J. Franklin Inst.*, May 1951, Vol. 251, No. 5, p. 555.) A presentation in a form "readily useful to the average engineer". Applications dealt with include partial differential equations, difference equations and closed-loop systems.

MEASUREMENTS AND TEST GEAR

538.3 : 532.5 **3040**

Further Development of Fluid Mappers.—A. D. Moore. (*Elect. Engng, N.Y.*, May 1951, Vol. 70, No. 5, pp. 396–401.) Essential text of paper published in *Trans. Amer. Inst. elect. Engrs*, 1950, Vol. 69, Part II, pp. 1615–1624. The development of various types of field simulators (see 154 of 1950) is described and their limitations are discussed.

621.317 + 621.317.083.7] : 621.39.001.11 **3041**

An 'Informational' Theory of Measurement and Telemetry.—J. Loeb. (*Ann. Télécommun.*, April 1951, Vol. 6, No. 4, pp. 90–97.) The features of similarity between telecommunication systems and measurement systems are recognized, and the latter are examined in the light of Shannon's information theory. The quantity of information actually obtained concerning the physical dimension measured—governed by a known probability law—is compared with the potentialities of the apparatus used, and definitions of matching and efficiency are established. Various aspects and applications of the theory are discussed, in particular its use in assessing the fitness of equipment to perform its designed function.

621.317.3 **3042**

A Method of Measurement of Reactance and Impedance with the Double Voltage Divider.—W. Weinitschke. (*Fernmeldetech. Z.*, March 1951, Vol. 4, No. 3, pp. 117–121.) Zinke's method (1075 of 1948) is modified to eliminate the need of standard reactors.

621.317.3 : 621.396.822 **3043**

Direct-Reading Noise-Factor Measuring Systems.—R. W. Peter. (*RCA Rev.*, June 1951, Vol. 12, No. 2, pp. 269–281.) The concept of noise factor of a receiver and methods for its measurement are discussed. A direct-reading arrangement for the centimetre-wave band is described in which a pulsed gas-discharge-tube source is used in conjunction with a c.r.o. display of rectified receiver output. A.g.c. is provided to hold the receiver output constant; the output with the noise source off then becomes a measure of noise factor.

621.317.313 **3044**

Works Instruments for Measurement of High-Frequency Current.—H. Wechsung. (*Elektrotech. Z.*, 1st May 1951, Vol. 72, No. 9, pp. 255–257.) The widespread use of h.f. techniques in industry necessitates provision of robust h.f. measuring instruments. Thermocouple types for currents of 0·5–6 A and current-transformer types for higher values of current are described.

621.317.335.3† **3045**

R.F. Dielectric Standards.—(*Tech. Bull. nat. Bur. Stand.*, June 1951, Vol. 35, No. 6, pp. 77–78.) A short account of the measurement service provided by the National Bureau of Standards on dielectric materials in the frequency range 10 kc/s–600 Mc/s. Bridge or resonance methods are used; at frequencies above 100 Mc/s cavity-type resonators are particularly suitable. For frequencies below 50 Mc/s a circuit has been developed including a stable linear negative resistance to balance out the resistance of the rest of the system and thus provide a high value of Q (up to 10^5).

621.317.335.3.029.63† : 621.315.615 **3046**

A Method of determining the Dielectric Constant and Dielectric Loss of Liquids in the Decimetre Waveband—O. Huber. (*Naturwissenschaften*, June 1951, Vol. 38, No. 12, pp. 281–282.) When measurements are made at frequencies over 200 Mc/s using a coaxial-line probe method, the maxima and minima exhibited by the voltage and current curves may be rather flat. This drawback is removed by making use not only of the wavelength reduction due to the introduction of the test substance into the line, but also of the capacitive impedance variation at high-voltage points along the line. The probe is kept fixed, while the liquid level is varied.

621.317.335.3.029.64† : 546.217 **3047**

The Permittivity of Air at a Wavelength of Ten Centimeters.—J. V. Hughes & W. Lavrench. (*Proc. Inst. Radio Engrs*, July 1951, Vol. 39, No. 7, p. 839.) Experimental results confirming those found by Phillips (2827 of 1950) are reported; an outline is given of the method used.

621.317.336.029.64 **3048**

Inductive Probe for Microwave Measurement Lines and Proximity-Field-Strength Meters.—F. Tischer. (*Kungl. tekn. Högsk. Handl., Stockholm*, 1951, No. 45, 18 pp. In German, with English summary.) The performance of a slotted-line standing-wave detector can be improved by using an inductive probe in the form of a wire loop. The loop must be symmetrical with respect to a plane perpendicular to the axis of the slotted line. If it is a pure inductance its dimensions do not affect the results; if it contains a capacitive element the dimensions of the loop should be small compared with the wavelength. To compensate for the capacitive element, part of the loop is screened by a short curl of wire attached to one side and at the end of the probe. The theory of this type of probe is developed and results of measurements are presented. See also 3093 of 1950.

621.317.351 : 621.396.621.54 **3049**

Indicator and Measurement Apparatus with Frequency-Sweep Oscillator or Generator.—W. Kroebel. (*Fernmeldetech. Z.*, Feb. & March 1951, Vol. 4, Nos. 2 & 3, pp. 70–76 & 106–111.) Relations derived from an experimental and theoretical study of optimum superheterodyne-receiver i.f. bandwidth, connecting this with intermediate frequency, required frequency band and local-oscillator (wobbulator) frequencies, are applied in the design of h.f. spectrometers. Methods of effecting the local frequency variation and applications of the instruments are discussed. See also 406 of 1950.

621.317.361.029.3 **3050**

A Method for Precision Measurement of Frequency in the A.F. Range.—J. C. Hentsch. (*Tech. Mitt. schweiz. Telegr.-Teleph Verw.*, 1st April 1951, Vol. 29, No. 4, pp. 121–126. In French and German.) The signal under test is applied to the vertical deflection plates of a c.r.o. operated with a sawtooth timebase synchronized with a standard frequency. A number b of separate waveforms appear simultaneously on the screen; a table is provided from which the signal frequency can be found as a fraction of the standard frequency, using the observed value of b.

621.317.723 : 621.385 **3051**

Electrometer Valve Balanced Circuits with Special Reference to the Ferranti BM4A.—H. A. Hughes. (*Electronic Engng*, June 1951, Vol. 23, No. 280, pp. 217–221.) A review with particular reference to the Barth and Caldwell circuits, which are analysed. The electrometer valve characteristics impose restrictions on the value of supply voltage necessary to balance the circuit.

621.317.725 **3052**

Square-Law Rectifier Voltmeter.—T. Roddam. (*Wireless World*, Aug. 1951, Vol. 57, No. 8, pp. 316–319.) Development of a bridge circuit giving a satisfactory square-law response over an input range of 0·1–3 V and comprising a combination of resistors and Ge-crystal rectifiers.

621.317.737† **3053**

Dielectric Measurements with Two Magic Tees on Shorted Wave Guides.—H. G. Beljers & W. J. van de Lindt. (*Philips Res. Rep.*, April 1951, Vol. 6, No. 2, pp. 96–104.) Using a 'magic Tee' as a bridge, a dielectric measurement can be carried out with greater accuracy than by the conventional method with a standing-wave detector. Some details of the construction of the apparatus and the method of measurement are given.

621.317.755 **3054**

Millimicrosecond Oscillography.—Y. P. Yu, H. E. Kallmann & P. S. Christaldi. (*Electronics*, July 1951, Vol. 24, No. 7, pp. 106–111.) Equipment for viewing and recording pulses as short as 0·5 mμs is described. Distributed amplifiers are used, with gains as great as 5 000, developing an undistorted output of 130 V. To avoid jitter, vacuum rather than gas-filled valves are used for the sweep generators, which have speeds up to 400 in./μs, with departure from linearity $\not>$ 5%. See also *Proc. Nat. Electronics Conference, Chicago*, 1950, Vol. 6, pp. 360–372.

621.317.755 : 621.385.832 **3055**

A Storage Oscilloscope.—L. E. Flory, J. E. Dilley, W. S. Pike & R. W. Smith. (*RCA Rev.*, June 1951, Vol. 12, No. 2, pp. 220–229.) An instrument for the observation of transients without use of photography. Transients are written on the screen of a graphechon storage tube whose sweep time may be as low as 0·15 μs, and the signal obtained by reading at slow speed is used to produce a visible image on a c.r. tube.

621.317.757 **3056**

A Spectrometer for Radiotelegraphy.—A. Tchernicheff. (*Ann. Télécommun.*, April 1951, Vol. 6, No. 4, pp. 110–116.) A heterodyne wave analyser for determining to within 1% the component frequencies of radiotelegraph signals emitted at a rate of $\geqslant$50 bauds. A quartz-controlled frequency of 170 kc/s is passed to a frequency changer giving an output at 70 kc/s ± 3 kc/s; this is applied to a quartz filter having a pass band of 12 c/s, permitting the resolution of spectral components spaced not less than 25 c/s. This is followed by a constant-impedance attenuator and a resistance-coupled feedback amplifier, feeding the measurement diode through a high-pass filter cutting off at 4 kc/s. A generator for producing pulses of controllable shape is described. Various results obtained are illustrated.

621.317.763 **3057**

Compagnie Industrielle des Téléphones Wave Analyser.—J. Selz & A. de Leudeville. (*Câbles & Transmission, Paris*, April 1951, Vol. 5, No. 2, pp. 110–118.) The M20 heterodyne-type analyser, covering the range 1–100 kc/s. Output is proportional to the logarithm of the input voltage for values of the latter ranging from 1 to 10 000 μV or from 10 to 100 000 μV, corresponding to a variation in level of 80 db. Frequency control is by a variable capacitor which may be driven by an electric motor, permitting automatic recording of output/frequency curves.

621.317.772 **3058**

Measuring Vector Relationships.—Y. P. Yu. (*Electronics*, July 1951, Vol. 24, No. 7, pp. 124–127.) Equipment is described by means of which imaginary and real components of an unknown voltage are indicated directly in terms of a reference voltage, over a frequency range 8 c/s–500 Mc/s. Phase differences between two voltages can also be measured.

621.317.794 **3059**

A Bolometer with Short Time-Lag.—M. Czerny, W. Kofink & W. Lippert. (*Ann. Phys., Lpz.*, 31st July 1950, Vol. 8, Nos. 1/2, pp. 65–86.) Account of the development of bolometers comprising a very thin layer of Bi evaporated on to a celluloid film.

621.385.2 : 621.396.822 **3060**

Methods to extend the Frequency Range of Untuned Diode Noise Generators.—H. Johnson. (*RCA Rev.*, June 1951, Vol. 12, No. 2, pp. 251–257.) The use of an inductance in series with the load resistance of the diode noise generator, by compensating for the effects of diode capacitance at high frequencies, substantially doubles the usable frequency range. An additional twofold extension is made possible by the use of a symmetrical diode arrangement as a balanced generator.

621.396.615.17 **3061**

Square-Wave Generator using Gated-Beam Tube.—L. E. Garner, Jr. (*Electronics*, July 1951, Vol. 24, No. 7, pp. 128–129.) A generator operating at discrete repetition rates between 50 and 500 000 pulses/sec comprises an anode-coupled symmetrical multivibrator (12AU7) followed by a gated-beam clipper (6BN6), wide-band amplifier and cathode follower. The rise-time at 500 kc/s is $<$0·07 μs.

621.396.621.089.6 : 621.396.933 **3062**

A New Method of Testing the Mark V Decca Navigator Receiver in High Noise Levels.—F. J. Hewitt. (*Trans. S. Afr. Inst. elect. Engrs*, March 1951, Vol. 42, Part 3, pp. 111–125.) Measurements were made to evaluate the serviceability of the equipment at various atmospheric noise levels and aircraft speeds. Aircraft motion and lane-identification were simulated by special circuits. The observations of lane slip and of failure of lane-identification were compared with noise figures recorded simultaneously. The required signal/noise ratios for effective working were assessed, the importance of aircraft speed and direction being emphasized. Using available noise data, the numbers of days of unserviceability per annum under various conditions are tabulated.

621.396.645 **3063**

A New, Instantaneously Logarithmic, Wide-Band Amplifier.—G. Epprecht. (*Tech. Mitt. schweiz. Telegr.-TelephVerw.*, 1st May 1951, Vol. 29, No. 5, pp. 161–167. In German.) In principle, the logarithmic characteristic is obtained by the use of nonlinear circuit elements, not by gain control; an approximation is produced by a suitable arrangement of linear elements. Special circuits are described for overcoming the drawbacks of diode insensitivity at low input levels and amplifier saturation with large inputs. The degree of approximation to a truly logarithmic law is calculated and the influence of the various parameters is discussed. A prototype amplifier is described, giving logarithmic response over the frequency range 0·5 kc/s–2·5 Mc/s.

621.317.083.7 **3064**

Registrierinstrumente (Recording Instruments). [Book Review]—A. Palm. Publishers: Springer, Berlin/Göttingen/Heidelberg, 1950, 220 pp., 19.50 DM. (*Naturwissenschaften*, May 1951, Vol. 38, No. 10, p. 239.) Gives valuable information about the principles of construction and the field of application of recording instruments, considering mainly those with typical and interesting features and those in common use.

621.317.3/.7 **3065**

Radio Laboratory Handbook. [Book Review]—M. G. Scroggie. Publishers: Iliffe & Sons, London, 5th edn 1950, 430 pp., 15s. (*Electronic Engng*, June 1951, Vol. 23, No. 280, p. 241.) "The fifth edition has been revised and new material added—in particular, the more recent developments in valve oscillator design."

621.317.725 **3066**

Vacuum-Tube Voltmeters. [Book Review]—J. F. Rider: Publishers: J. F. Rider, New York, 2nd edn, 422 pp., $4.50. (*Electronics*, July 1951, Vol. 24, No. 7, pp. 254, 256.) "This second edition brings the first (1941) edition up to date . . . It is difficult to think of a single aspect of this particular instrument that has been neglected."

OTHER APPLICATIONS OF RADIO AND ELECTRONICS

536.53 : 537.312.6 : 621.315.592† **3067**

The Design of Thermistor Thermometers with Linear Calibration.—W. R. Beakley. (*J. sci. Instrum.*, June 1951, Vol. 28, No. 6, pp. 176–179.)

537.312.6 : 621.315.592† **3068**

Thermistors as used in Ultrasonic Interferometry.—O. Lindström. (*Research, Lond.*, May 1951, Vol. 4, No. 5, pp. 238–239.) The high sensitivity of the thermistor as a power-indicating device makes it possible to work at low ultrasonic intensities while using rugged measuring devices.

537.533 **3069**

The Generation of Intense Electron Flashes.—W. Schaaffs. (*Z. Naturf.*, March 1950, Vol. 5a, No. 3, pp. 132–136.) A capacitor and spark gap are connected in series across the anode-cathode path of an evacuated tube. When the capacitor discharges electrons are pulled out of the cold cathode, through the cylindrical anode, and pass out through a Lenard window. The electron flashes thus produced can be applied in the same way as X-ray flashes. Mean current strengths of some amperes and durations $<10^{-7}$ sec have been obtained.

551.501.9 **3070**

An Air-Launched Automatic Weather Station.—(*Tech. Bull. nat. Bur. Stand.*, May 1951, Vol. 35, No. 5, pp. 61–63.) This unit falls by parachute to the ground, where its aerial is erected by explosive charges. Separate mechanisms responsive to pressure, temperature and humidity cause variations in associated resistors which govern the pulse rate of a radio transmitter in the unit.

620.179.16 **3071**

Practical Testing of Materials by Ultrasonic Means.—H. Krautkrämer & J. Krautkrämer. (*Z. Ver. dtsch. Ing.*, 1st May 1951, Vol. 93, No. 13, pp. 349–362.) Brief review of modern methods, description of a German pulse-type equipment and practical details of its operation in detecting flaws in castings, forgings, welds, etc.

620.179.16 **3072**

Improvements in the Design of Ultrasonic Lamination Detection Equipment.—H. R. Clayton & R. S. Young. (*J. sci. Instrum.*, May 1951, Vol. 28, No. 5, pp. 129–132.) To reduce standing-wave effects in the ultrasonic examination of Al blanks and sheets, the transmitting crystal is energized over a wide band of frequencies. Defective areas of diameter $<\frac{3}{4}$ in. have been detected, and the contours of a lamination can be traced with satisfactory accuracy.

621.317.087.5 **3073**

Recording of Very-High-Speed Phenomena.—J. Granier. (*Tech. mod., Paris*, April 1951, Vol. 43, No. 3, pp. 213–221.) Electronic methods for recording phenomena of duration <1 ms are described.

621.317.335.3† : 547 **3074**

The Construction of a Hertzian Oscillator and its Application to Organic Analysis.—H. A. Sack & B. Sack. (*J. Rech. Centre nat. Rech. Sci.*, 1950/1951, Vol. 3, No. 15, pp. 325–331.) The liquid specimen to be analysed is contained in a quartz test tube forming the dielectric of a capacitor which determines the wavelength of the v.h.f. oscillator. The grid current of the oscillator provides a measure of the electrical constants of the specimen, by comparison with the results obtained with known specimens.

621.317.755.087.4 **3075**

The Electrical Recording of Diagrams with a Calibrated System of Coordinates.—B. G. Dammers, P. D. van der Knaap & A. G. W. Uitjens. (*Philips tech. Rev.*, April 1951, Vol. 12, No. 10, pp. 283–292.) Description of apparatus for displaying families of curves, such as valve characteristics, on a c.r.o. together with the relevant coordinate system. The vertical reference lines, the test function, and the horizontal reference lines are traced in sequence, at an overall repetition frequency of 25/sec.

621.318.572 : 535.33 **3076**

Suppression of Certain Parts in Spark Spectra by Electronic Time Switching.—H. M. Crosswhite, D. W. Steinhaus & G. H. Dieke. (*J. opt. Soc. Amer.*, May 1951, Vol. 41, No. 5, pp. 299–302.) Description of a device which renders a photocell sensitive only at desired intervals of a spark cycle. Use of the arrangement for spectrochemical analysis is discussed.

621.365.54† **3077**

Induction Heating Installation for Motor-Car Components.—(*Machinery, Lond.*, 12th July 1951, Vol. 79, No. 2017, pp. 69–71.) An 8-kW equipment with automatic controls is described, for hardening or annealing small metal parts.

621.365.54† **3078**

A High-Temperature Vacuum Induction Furnace.—H. T. Smyth, R. H. Meinken & L. G. Wisnyi. (*J. Amer. ceram. Soc.*, May 1951, Vol. 34, No. 5, pp. 161–163.) Heat is developed by induction in a Mo or Ta tube. Power is supplied from a h.f. valve generator of 10 kW. The apparatus was developed for measuring physical properties at temperatures >2 000°C.

621.38.001.8 : 539.17 **3079**

Practical Aspects of Radioactivity Instruments: Part 1 — Construction.—W. C. Elmore, H. Kallman & C. E. Mandeville. (*Nucleonics*, June 1951, Vol. 8, No. 6, pp. S3–S12.) Technique of wiring, selection of components and mechanical construction of electronic equipment is discussed; G-M tubes, photomultipliers and ionization chambers are considered particularly.

621.383.001.8 : 535.61-15 : 778.37 **3080**

Use of Image Phototube as a High-Speed Camera Shutter.—A. W. Hogan. (*J. Soc. Mot. Pict. Televis.*

Engrs, June 1951, Vol. 56, No. 6, pp. 635–641.) See 2250 of September.

621.385.833 **3081**

Calculation of Electronoptical Image Formation for Three Typical Powerful Magnetic Lenses; Relation with the Usual Lens Equation.—W. Glaser & F. Lenz. (*Ann. Phys., Lpz.*, 15th March 1951, Vol. 9, No. 1, pp. 19–28.)

621.385.833 **3082**

The General Properties of Low-Power Electron Lenses. A First Approximation.—F. Bertein. (*J. Phys. Radium*, May 1951, Vol. 12, No. 5, pp. 595–601.) Analysis is given for electrostatic lenses, space charge being neglected. The average convergence has a uniform value over the whole aperture and depends, for electrons of given energy, only on the original field. The focal length is determined for the cases of an infinite slit, a cylindrically symmetrical lens, and an elliptic aperture. Magnetic lenses are analysed by the same method.

621.385.833 **3083**

Apparatus for Electron-optical Demonstrations.—C. Fert. (*C. R. Acad. Sci., Paris*, 4th June 1951, Vol. 232, No. 23, pp. 2085–2087.) A simple multi-purpose c.r.-tube apparatus is described, permitting demonstration to an audience of fundamental experiments such as the formation of images, the deflection of electrons, etc.

621.387.4† **3084**

Temperature Effect in Counters and Radio Valves.—A. Daudin & J. Daudin. (*J. Phys. Radium*, April 1951, Vol. 12, No. 4, p. 564.) A current of cool air circulating around a 6J5 valve operating below its rated voltage in a cosmic-ray counter circuit caused a reduction of 70% in recorded coincidences.

621.387.424† **3085**

Geiger-Müller Photo-Counter with Ferro-Nickel Cathode for Ultraviolet Rays.—J. Labeyrie. (*J. Phys. Radium*, April 1951, Vol. 12, No. 4, pp. 569–570.) Description of the design and performance of a stable counter highly sensitive to ultraviolet radiation of wavelengths between 2 000 and 3 000 Å.

621.387.464† **3086**

Delayed Coincidence Circuit for Scintillation Counters.—A. Lundry. (*Rev. sci. Instrum.*, May 1951, Vol. 22, No. 5, pp. 324–327.) Pulses from the photomultipliers used as detectors are amplified in distributed amplifiers and applied to a Ge-diode-bridge coincidence circuit.

621.387.464† **3087**

Nuclear Scintillation Counters.—J. B. Birks. (*J. Brit. Instn Radio Engrs*, June 1951, Vol. 11, No. 6, pp. 209–220. Discussion, pp. 221–223.) Physical processes affecting the design of these counters are discussed, with particular reference to the choice of suitable phosphors and photomultipliers. Advantages of scintillation counters over conventional gas-ionization counters are illustrated.

PROPAGATION OF WAVES

538.566 **3088**

The W.K.B. Approximation as the First Term of a Geometric-Optical Series.—H. Bremmer. (*Commun. pure appl. Math.*, June 1951, Vol. 4, No. 1, pp. 105–115.) The propagation of waves in an inhomogeneous medium is analysed in a manner which stresses the effects of successive scattering reflections in the medium. The W.K.B. approximation is then seen to be the first term of an infinite series and to correspond to an analysis of primary scattering only. Simple relations between the higher-order terms are obtained and the limitations of the W.K.B. approximation discussed. The resultant reflection coefficient of an inhomogeneous medium is calculated for a single case.

538.566 **3089**

Remarks concerning Wave Propagation in Stratified Media.—S. A. Schelkunoff. (*Commun. pure appl. Math.*, June 1951, Vol. 4, No. 1, pp. 117–128.) The reflection coefficient for a stratified medium is considered physically and mathematically; the dependence of the coefficient on layer thickness and shape is discussed fully. Factors causing variations of the reflection coefficient with frequency are examined. For a wave incident on an inhomogeneous layer no meaning can be attached to the term 'reflection coefficient'; propagation is controlled by the higher-order derivatives of the variation of reflection parameters with distance in the layer, e.g. an Epstein layer gives a particular variation of reflection coefficient with thickness not found for other types of layer.

621.396.11 **3090**

Polarization of the *Z*-Trace.—J. E. Hogarth. (*Nature, Lond.*, 9th June 1951, Vol. 167, No. 4258, p. 943.) An experiment carried out at Fort Chimo (58.1°N, 68.3°W) on 30th September 1950 showed the polarization of the *Z* trace (third critical frequency) to be ordinary. This is compatible with the theory that the *Z* trace is the longitudinal ordinary reflection, made possible at off-longitudinal directions by the effect of collision [see 1471 of June (Scott)].

621.396.11 **3091**

Measurements of the Direction of Arrival of Short Radio Waves Reflected at the Ionosphere.—E. N. Bramley & W. Ross. (*Proc. roy. Soc. A*, 22nd June 1951, Vol. 207, No. 1089, pp. 251–267.) Report of observations made mainly on first-order F-layer reflections in normal day-time conditions, both over an oblique path corresponding to a range of 700 km and at nearly vertical incidence. A phase-comparison method was used, with pulsed signals, over the frequency range 4–15 Mc/s. A typical echo shows both rapid (second-to-second) fluctuations in direction and slow changes having a quasi-period of up to more than 30 min, indicating the occurrence of large-scale random tilts in the ionosphere of an r.m.s. magnitude about 1·5–2° and extending horizontally over at least some tens of kilometres.

621.396.11 : 535 **3092**

Remarks on the Optics of Radio Waves.—O. Halpern. (*Phys. Rev.*, 15th June 1951, Vol. 82, No. 6, pp. 971–972.) Optical theory is extended to show that any metallic layer is a good reflector for radio waves as long as the r.f. conductivity is not too different from the d.c. value.

621.396.11 : [550.385 + 551.594.5 **3093**

Aurora and Magnetic Storms.—R. K. Moore. (*QST*, June 1951, Vol. 35, No. 6, pp. 14–19, 110.) Discussion of the nature of ionospheric disturbances and their effects on radio communication.

621.396.11 : 551.510.535 **3094**

Approximate Expressions for the Refractive Index of an Ionized Medium acted upon by the Earth's Magnetic Field.—É. Argence. (*C. R. Acad. Sci., Paris*, 4th June 1951, Vol. 232, No. 23, pp. 2080–2082.) Approximate formulae are derived based on Poeverlein's graphical determination of the paths of e.m. waves refracted by the ionosphere (718 and 2875 of 1950) and taking the earth's magnetic field into account.

621.396.11.029.62/.63 **3095**

Coverage on 45 to 450 Mc/s.—K. Bullington. (*FM-TV*, May 1951, Vol. 11, No. 5, pp. 21–24, 36.) See 1496 of 1950.

RECEPTION

621.396.621 : 621.396.9 **3096**

A Simple Logarithmic Receiver.—J. Croney. (*Proc. Inst. Radio Engrs*, July 1951, Vol. 39, No. 7, pp. 807–813.) A description is given of a successive-detection logarithmic amplifier and of a simplified circuit producing either logarithmic or linear amplification by operation of a single switch. A method of calculating the shape of the output/input curve is described, the measured curves for three logarithmic receivers of this simplified type are shown, and the relevant circuit values specified. The advantages of the logarithmic receiver for radar work are indicated.

621.396.621.029.51/.53 **3097**

A Subminiature Low-Frequency Radio Receiver.—(*Tech. Bull. nat. Bur. Stand.*, May 1951, Vol. 35, No. 5, pp. 68–70.) Description of a radio range receiver tunable from 190 to 550 kc/s and using printed circuits in seven subassemblies, details of which are given. The entire unit is hermetically sealed.

621.396.622 : 621.396.822 **3098**

The Rectification and Observation of Signals in the presence of Noise.—R. E. Burgess. (*Phil. Mag.*, May 1951, Vol. 42, No. 328, pp. 475–503.) The rectification of random narrow-band noise in the presence of a c.w. or modulated signal is analysed. The detector considered is of the type providing a rectified voltage which is a function of the instantaneous amplitude of the input wave. The smoothing present in the detector circuit is such that the h.f. components of the applied wave are removed but the l.f. variations of its envelope are faithfully transmitted. The mean (or d.c.) component of the rectified voltage and its r.m.s. fluctuation about that mean (or l.f. noise output) are calculated as a function of the input signal/noise ratio and particular attention is paid to linear and square-law detectors. The output signal/noise ratio for an a.m. signal input and for the audible-beat reception of a c.w. signal are calculated. The spectrum of the l.f. noise output from a detector supplied with random noise is closely similar for linear and square-law detectors. The discrimination of a weak signal in noise is not critically dependent upon the law of the detector, and in particular the difference for a linear and a square-law detector is negligible. The effect of receiver bandwith, meter time-constant and integration time in improving the discernment of a weak signal is considered.

621.396/.397.82 **3099**

Standards on Radio Receivers: Open Field Method of Measurement of Spurious Radiation from Frequency Modulation and Television Broadcast Receivers, 1951.—(*Proc. Inst. Radio Engrs*, July 1951, Vol. 39, No. 7, pp. 803–806.) Reprints of this Standard, 51 IRE 17 S1, may be purchased while available from The Institute of Radio Engineers, 1 East 79 Street, New York 21, N.Y., at $0.50 per copy.

621.396.82 : 621.396.41 **3100**

Interference in Multi-Channel Circuits.—L. Lewin. (*Elect. Commun.*, June 1951, Vol. 28, No. 2, pp. 142–155.) Reprint of 986 of April.

621.396.822 **3101**

The Effect of Circuit Losses on Noise Factor.—D. McDonnell. (*J. Brit. Instn Radio Engrs*, June 1951, Vol. 11, No. 6, pp. 224–226.) The optimum input conditions for minimum noise factor in a neutralized triode input stage are considered, and theoretically derived curves are given of the variations in noise factor with input circuit losses.

621.396.823 **3102**

Corona Problems on 400-kV Lines: Part 2 — Radio Interference from Corona Effect on Conductors.—N. B. Bogdanova & A. M. Lifshits. (*Bull. Acad. Sci. U.R.S.S., tech. Sci.*, April 1951, No. 4, pp. 497–505. In Russian.)

621.396.828 : 354.42/.44 **3103**

The High-Frequency Statutes [in Germany].—H. Pressler. (*Fernmeldetech. Z.*, March 1951, Vol. 4, No. 3, pp. 123–129.) Report and discussion on present regulations governing the use of h.f. equipment.

621.396.621 **3104**

Receiver Circuitry and Operation. [Book Review]—A. A. Ghirardi & J. R. Johnson. Publishers: Rinehart Books Inc., New York, 1951, 669 pp., $6.00. (*Electronics*, July 1951, Vol. 24, No. 7, pp. 258, 260.) "Here is basic coverage of the circuits most often encountered in modern television, a.m. radio and f.m. radio receivers, written for the technician and student who seeks to bring his education up to date."

STATIONS AND COMMUNICATION SYSTEMS

621.39.001.11 **3105**

A Note on Autocorrelation and Entropy.—P. Elias. (*Proc. Inst. Radio Engrs*, July 1951, Vol. 39, No. 7, p. 839.) A simple relation between the information content per symbol of a message and its autocorrelation function is presented.

621.39.001.11 : 621.317.35 **3106**

Random Signals with Limited Spectra.—J. Oswald. (*Câbles & Transmission, Paris*, April 1951, Vol. 5, No. 2, pp. 158–177.) A theoretical study emphasizing the principal mathematical properties of such signals and showing how these define the nature of the signals. The theory is applied to the particular cases of single-sideband modulation multiplex time-division and pulse-code systems. See also 210 of January.

621.394.3 **3107**

Tape Relay.—S. A. Westwood. (*Proc. Instn Radio Engrs, Aust.*, May 1951, Vol. 12, No. 5, pp. 131–141.) Describes modern practice in the automatic handling of material at the transmitting and receiving stations of a printing telegraph system. Relevant radio technique is discussed briefly.

621.396.41 **3108**

Four/Two-Channel Time-Division Multiplex Telegraph System for Long-Distance Radio Circuits.—W. C. Peterman & A. Minc. (*Elect. Commun.*, June 1951, Vol. 28, No. 2, pp. 127–141.) Description, with circuit diagrams, of equipment and operation of a frequency-shift system.

621.396.61/.62 **3109**

Miniature Walkie-Talkie.—(*Wireless World*, Aug. 1951, Vol. 57, No. 8, pp. 323–324.) Description of Pye equipment Type PTC 120, operating on two spot frequencies (crystal-controlled) in the band 60–100 Mc/s. Dimensions are $9\frac{1}{2}$ in. × $6\frac{1}{2}$ in. × $3\frac{1}{4}$ in., and weight is $8\frac{1}{2}$ lb complete. Only six valves, plus Ge crystal and quartz crystals, are used. The transmitter r.f. power output is 0·1 W.

621.396.61/.62 **3110**

A Civil Defense Portable.—E. P. Tilton. (*QST*, May 1951, Vol. 35, No. 5, pp. 35–38..120.) A transmitter-receiver for operation on 50 Mc/s, comprising a transmitter having a single-valve r.f. section with an audio pentode as modulator, and a simple superregenerative receiver with one audio stage. It is operated by three batteries, 1·4-V, 90-V and 6-V, and weighs 4 lb.

621.396.619.16 **3111**

Pulse Generation and Shaping at Microwave Frequencies.—W. A. Klute. (*Bell Lab. Rec.*, May 1951, Vol. 29, No. 5, pp. 216–220.) A system for the generation of pulses of the on-or-off type, suitable for p.c.m., at a repetition frequency of 18.432 Mc/s and in four adjacent bands with 30-Mc/s spacing. The carrier frequency is about 4 kMc/s. A method of pulse generation based on the variation with beam voltage of the gain of a travelling-wave valve is used.

621.396.664 **3112**

A New Television Studio Audio Console.—R. W. Byloff. (*RCA Rev.*, June 1951, Vol. 12, No. 2, pp. 211–219.) Features of the apparatus, which is designed for compactness and flexibility in operation, include 12-channel mixing, removable vision-monitoring unit, etc.

621.396.67 : 621.396.65 **3113**

Application of Polarity Diplexing to Microwave Relay Systems.—C. A. Rosencrans. (*TV Engng, N.Y.*, June 1951, Vol. 2, No. 6, pp. 14, 27.) A practical diplexing system uses horizontal and vertical polarization respectively for two signals transmitted along the same path; a small frequency shift is introduced to minimize depolarization interference.

621.396.712 **3114**

Broadcast Station Construction Practices.—Q. G. Cumeralto. (*Tele-Tech*, June 1951, Vol. 10, No. 6, pp. 34–36, 89.) A general survey of factors to be considered in siting and designing a radio station.

621.396.73 : 621.396.11.029.64 **3115**

Mobile Equipment for the Study of Centimetre-Wave Propagation.—J. Maillard, J. Voge & P. Chavance. (*Ann. Télécommun.*, May 1951, Vol. 6, No. 5, pp. 131–144.) Propagation theory is applied in the design of the equipment, in respect of transmitter power, receiver noise factor and bandwidth. Chief features of the apparatus are the a.f.c. system and the transmission of information regarding the instantaneous level of the emitted signal. This is achieved by modulating the frequency of the radiated signal to a depth corresponding to the power transmitted. The pulse detector circuit receiving this information also feeds a c.r.o. for examination of pulse shape. A 'peak detector' circuit records the level of the received pulse. The transmission-level recording channel may be modified for simultaneous reception of two transmissions on different close frequencies.

621.396.931 **3116**

Radiotelephony for Communication with Vehicles.—P. Häni. (*Tech. Mitt. schweiz. Telegr.-TelephVerw.*, 1st May 1951, Vol. 29, No. 5, pp. 168–177. In German.) Description of f.m. equipment at the fixed station and in the subscriber's vehicle in the system operating in Zürich. Calling from the normal telephone network is fully automatic. Subscription rate is 18 Swiss francs per month plus the cost of the mobile equipment. Unattended relay stations extend the range beyond 25 km for police services, etc. See also 2350 of 1950 (Kappeler).

621.396.931 **3117**

Crowded-Band Mobile Equipment.—H. H. Davids & T. J. Foster. (*Electronics*, July 1951, Vol. 24, No. 7, pp. 102–105.) A transmitter-receiver system for the 148–174 Mc/s band is described. The receiver uses triple-tuned i.f. transformers to reduce adjacent-channel interference, and controlled r.f. gain to reduce intermodulation interference. Results of field tests are given.

621.396.97 **3118**

The Development of Broadcasting in the Union of South Africa.—H. O. Collett. (*Trans. S. Afr. Inst. elect. Engrs*, May 1951, Vol. 42, Part 5, pp. 175–187.) A historical survey of the service. Developments in transmitters, studios, manufacturing facilities and the use of recording are traced. Probable future developments include the linking of the transmitters by telephone lines.

SUBSIDIARY APPARATUS

621.314.63 **3119**

Developments in Metal Rectifiers.—G. E. B. White. (*Elect. Times*, 31st May 1951, Vol. 119, No. 3108, pp. 901–904.) Review of characteristics of copper-oxide and selenium rectifiers manufactured by the Westinghouse Brake and Signal Co. Ltd.

621.352/.353 **3120**

Modern Batteries and their Use in Telecommunications (Miniature Batteries).—J. Pernik. (*Ann. Télécommun.*, May 1951, Vol. 6, No. 5, pp. 122–126.) Discussion of experimental developments in the design and manufacture of light-weight cells. The replacement of Zn by Mg and the use of methylamine electrolytes in the Leclanché-type cell are considered. Construction and characteristics of mercuric-oxide and silver-chloride cells are reviewed.

621.352 **3121**

Developments in Dry Batteries and Associated Electronic Equipment.—P. H. Adams. (*Proc. Instn Radio Engrs, Aust.*, June 1951, Vol. 12, No. 6, pp. 167–178.) Developments in dry batteries are described, and the design of receivers, hearing aids, photoflash equipment and radiosonde equipment is examined in relation to battery requirements.

TELEVISION AND PHOTOTELEGRAPHY

621.396.397/.82 **3122**

Standards on Radio Receivers: Open Field Method of Measurement of Spurious Radiation from Frequency Modulation and Television Broadcast Receivers, 1951.—(See 3099.)

621.397 **3123**

Picture Telegraphy by Wire.—V. Castell. (*Tech. Mitt. schweiz. Telegr.-TelephVerw.*, 1st June 1951, Vol. 29, No. 6, pp. 236–239. In German.) Description of the terminal apparatus in Zürich for black-and-white phototelegraphy. The picture is scanned in 684 lines across a 13 cm × 8 cm frame at 7 850 pulses per second. The motor driving the revolving drum is tuning-fork controlled; synchronization is by tone wheel and stroboscope.

621.397.26 **3124**

A Diversity Receiving System for Radio-Frequency Carrier-Shift Radiophoto Signals.—J. B. Atwood (*RCA Rev.*, June 1951, Vol. 12, No. 2, pp. 177–190.) As compared with the f.m.-subcarrier system, the radio-frequency carrier-shift (r.f.c.s.) system shows improvement in signal noise ratio and reduction of interference due to the narrower bandwidth which can be used in the receiver. Further definite improvement was obtained with r.f.c.s. using the space-diversity system described. The diversity receiving arrangement, used with two single-sideband receivers, also effected an improvement in reception by the f.m.-subcarrier system.

621.397.26 **3125**

Stratovision in Swiss Territory?—W. Kuentz. (*Tech. Mitt. schweiz. Telegr.-TelephVerw.*, 1st April 1951, Vol. 29, No. 4, pp. 126–131. In French and German.)

Maps of Swiss districts are reproduced showing the areas in which television reception should be possible from an airborne transmitter 10 km above Berne.

621.397.26 **3126**

Television-Link Sound Diplexer.—L. Staschover & H. G. Miller. (*Elect. Commun.*, June 1951, Vol. 28, No. 2, pp. 108–109.) A 5-Mc/s sub-carrier, modulated in frequency by the sound programme, is combined with the video frequencies (bandwidth 4·5 Mc/s) and then passed to the link transmitter. The sound frequencies in the demodulated output from the link receiver are separated from the vision frequencies by a filter, amplified, limited and demodulated in a balanced discriminator. The final a.f. output is 18 db above 1 mW into balanced, or unbalanced, impedances of 50, 150 and 600 ohms.

621.397.26 : 621.396.615.142.2 : 621.396.621.53 **3127**

Application of the Klystron Mixer to Frequency Changing in Television Relays.—V. Learned. (*Ann. Télécommun.*, May 1951, Vol. 6, No. 5, pp. 127–130.) French version of 256 of January.

621.397.26 : 621.397.81 **3128**

Polycasting.—R. M. Wilmotte. (*Proc. Inst. Radio Engrs*, July 1951, Vol. 39, No. 7, pp. 740–752.) A theoretical study is made of the service obtainable in the v.h.f. and u.h.f. bands by broadcasting a programme from a number of low-powered stations, instead of from a single high-powered one, to cover a continuous area. Estimates of service, evaluated statistically, and taking into account ghosts and signal intensity required to overcome noise, are given together with a tentative allocation of stations in two typical areas of the United States.

621.397.5 **3129**

Experimental Television Transmissions in North-West Germany.—W. Nestel. (*Elektrotech. Z.*, 1st June 1951, Vol. 72, No. 11, pp. 346–348.) The development of television in Germany is surveyed, and a short explanation of the principles of television transmission given. The advantages and disadvantages of the three different line standards are discussed, and the reasons for choosing the 625-line system indicated. The preparations for public transmissions are described.

621.397.5 : 535.62 **3130**

The Present Status of Color Television.—(*Proc. Instn Radio Engrs, Aust.*, April & May 1951, Vol. 12, Nos. 4 & 5, pp. 109–115 & 141–150.) Reprint. See 249 of January.

621.397.5 : 535.62 **3131**

Spectrum Utilization in Color Television.—R. B. Dome. (*Gen. elect. Rev.*, June 1951, Vol. 54, No. 6, pp. 18–22.) Comparison of various time- and frequency-division multiplexing techniques from the point of view of securing the most efficient use of available transmission channels.

621.397.5 : 535.88 : 791 **3132**

A Comprehensive Proposal for a Closed-Loop Theater Television System.—R. L. Garman & R. W. Lee. (*J. Soc. Mot. Pict. Televis. Engrs*, May 1951, Vol. 56, No. 5, pp. 473–483. Discussion, pp. 483–486.) The system described permits selection of programmes at will from its own studio or from outside sources. To obtain picture quality comparable with that of the commercial cinema, it is proposed to adopt a standard of 675 lines double interlaced at a frame frequency of 24/sec.

621.397.5(083.74) **3133**

The C.C.I.R. 625-Line Television Standards.—H. Laett. (*Tech. Mitt. schweiz. Telegr.-TelephVerw.*, 1st March & 1st April 1951, Vol. 29, Nos. 3 & 4, pp. 81–86 & 132–136. In German and French.) Full text and explanatory comment.

621.397.6 **3134**

Automatic TV Sync Lock.—L. M. Leeds. (*Electronics*, July 1951, Vol. 24, No. 7, pp. 99–101.) See also 2294 of September (Roe).

621.397.6 : 778.5 — 621.395.625.6 **3135**

New Video Recording Camera.—F. N. Gillette & R. A. White. (*J. Soc. Mot. Pict. Televis. Engrs*, June 1951, Vol. 56, No. 6, pp. 672–679.) The problem of television recording is discussed and a camera using 16-mm film and recording both vision and sound is described. The film is ready for projection within 60 sec of the television reception.

621.397.61 **3136**

Continuous Film Scanner for TV.—D.G.F. (*Electronics*, July 1951, Vol. 24, No. 7, pp. 114–116.) Equipment under development at the Bell Telephone Laboratories is described. A mirror-drum projector is used, with two electronic servo-controls to compensate for jitter and flicker; the arrangement permits flying-spot scanning of a 24-frames/s film at 60 fields/s.

621.397.611.2 **3137**

On the Mechanism of High-Velocity Target Stabilization and the Mode of Operation of Television-Camera Tubes of the Image-Iconoscope Type.—P. Schagen. (*Philips Res. Rep.*, April 1951, Vol. 6, No. 2, pp. 135–153.) Hypotheses are advanced, and from them equations are derived for the variation of target-element potential with time and for the signal voltage. The theory indicates that improvement of picture quality should result from increase of secondary-emission coefficient and capacitance of target; this is confirmed by experiments.

621.397.62 **3138**

The Cosine Deflection Yoke.—J. Pell. (*TV Engng, N.Y.*, June 1951, Vol. 2, No. 6, pp. 10–11, 27.) A uniform deflecting field producing no distortion of the c.r. tube spot is obtained by using a coil wound so that the number of turns varies as the cosine of the angle between the deflection direction and the radius to the particular point of the winding. Residual barrel or pincushion distortion due to geometrical factors can be corrected by means of small permanent magnets.

621.397.62 **3139**

High-Efficiency Horizontal-Deflection System and High-Voltage Supply.—J. Henry. (*Radio franç.*, Feb. 1951, No. 2, pp. 1–8.) Efficiency of generation of the saw-tooth scanning voltage and of high-voltage supply in television reception is improved by the use of a line autotransformer, with ferroxcube core, and of regeneration. See also 3674 of 1947 and 1783 of 1950 (Schade).

621.397.62 **3140**

40 Faults occurring in Television.—(*Télévis. franç.*, April 1951, No. 69, pp. 19–26.) A chart listing the major faults liable to occur in a television receiver, illustrated by diagrams of the display produced.

621.397.62 : 535.88 **3141**

High-Definition Projection Receiver.—R. Gondry. (*Télévision*, May 1951, No. 13, pp. 105–110.) Full constructional details are given of a receiver using the 'Télécran' optical system, permitting variation of the distance between objective and screen from 40 cm to 250 cm, with picture size varying from 19·5 × 26 cm to 90 × 120 cm.

621.397.62 : 621.396.822 **3142**

Expediting TV Receiver Noise Calculations.—D. A. Miller & E. A. Slusser. (*TV Engng, N.Y.*, April 1951, Vol. 2, No. 4, pp. 12, 13..35.) Abacs are presented for calculation of thermal noise, equivalent noise input, etc.

621.397.7 **3143**

Kirk O'Shotts Television Transmitting Station.—(*Engineer, Lond.*, 29th June 1951, Vol. 191, No. 4979, p. 863; *Engineering, Lond.*, 29th June 1951, Vol. 171, No. 4457, p. 793.) Some details are given of the high-power station under construction near Glasgow, on a site 900 ft above sea level. The vision transmitter is to have a power output of 50 kW, with an operating frequency of 56·75 Mc/s; the frequency of the sound transmitter will be 53·25 Mc/s.

621.397.828 **3144**

Suppression of Harmonics in Radio Transmitters.—G. T. Royden. (*Elect. Commun.*, June 1951, Vol. 28, No. 2, pp. 112–120.) A Π-network filter in the transmitter output circuit, with screening of the transmitter and its supply leads, should give sufficient general suppression for a transmitter in an isolated position. For greater suppression, a double-Π network with a common shunt capacitance should be used. Particular harmonics may be attenuated by simple single filters or by quarter-wavelength open-ended stubs connected directly to the transmitter output terminals.

TRANSMISSION

621.316.726.078.3 : 621.396.615 **3145**

A Simple Crystal Discriminator for F.M. Oscillator Stabilization.—J. Ruston. (*Proc. Inst. Radio Engrs*, July 1951, Vol. 39, No. 7, pp. 783–788.) Detailed description of a single-crystal discriminator designed for use in a television sound transmitter.

621.396.615.142.2 : 621.396.621.53 : 621.397.26 **3146**

Application of the Klystron Mixer to Frequency Changing in Television Relays.—V. Learned. (*Ann. Télécommun.*, May 1951, Vol. 6, No. 5, pp. 127–130.) French version of 256 of January.

621.396.619.2 **3147**

Transistor Frequency Modulator Circuit.—L. L. Koros & R. F. Schwartz. (*Electronics*, July 1951, Vol. 24, No. 7, pp. 130–132, 134.) Design and circuit details are given and performance tests reported; the simplicity and power economy consequent on the use of the transistor are stressed. The wide variation of internal collector impedance on application of audio voltages to the emitter is used to vary the resonance frequency of the tank circuit in a conventional oscillator. Modulation characteristics and distortion are shown in graphs.

621.397.828 **3148**

Suppression of Harmonics in Radio Transmitters.—Royden. (See 3144.)

VALVES AND THERMIONICS

535.215.4 **3149**

Photoconductivity in the Elements.—T. S. Moss. (*Proc. phys. Soc.*, 1st June 1951, Vol. 64, No. 378A, pp. 590–591.) The photoconducting elements are non-metallic and have a refractive index >2. They are:—Te, P, I, As, B, Se (red), S, C (diamond), Si and Ge. The activation energies determined from photoconductivity measurements agree closely with those from resistance/temperature measurements. Refractive index is related to the photoconductive threshold wavelength. For Ge, Si and diamond a quantitative relation holds, namely En^4 = constant (E is activation energy, n is refractive index). See also 1273 of May.

537.533.8 **3150**

Secondary Electron Emission from Ni, Mo, MgO and Glass.—G. Blankenfeld. (*Ann. Phys., Lpz.*, 15th March 1951, Vol. 9, No. 1, pp. 48–56.) The variation with temperature of the secondary emission of Ni, Mo, MgO and glass is investigated, by an experimental method briefly described, for various values of primary energy. For Ni and Mo the temperature variation is zero, for glass very small. For MgO the secondary emission decreases as temperature rises. The results are discussed in the light of Hackenberg's theory (see *Ann. Phys., Lpz.*, 1948, Vol. 6, No. 2, p. 404).

537.581 **3151**

Electron Emission from Metal Surfaces as an After-Effect of Mechanical Working, or Glow Discharge.—O. Haxel, F. G. Houtermans & K. Seegar. (*Z. Phys.*, 28th May 1951, Vol. 130, No. 1, pp. 109–123.)

537.583 **3152**

The Origin of Bombardment-Enhanced Thermionic Emission.—J. B. Johnson. (*Phys. Rev.*, 1st July 1951, Vol. 83, No. 1, pp. 49–53.) "Measurements on bombardment-enhanced thermionic emission from oxide cathodes show that (*a*) the effect is not related to normal fading and recovery of thermionic emission; (*b*) the emitted electrons have energies in the thermal range rather than in the secondary range. Calculations indicate that the electron bombardment releases more than enough internal secondaries to account for the effect as increased thermionic emission. A more comprehensive theory is needed for explaining why the observed effect is not even larger."

621.314.63 **3153**

Height of the Potential Barrier in Contact Rectifiers and its Change with Temperature.—E. Billig & M. S. Ridout. (*Nature, Lond.*, 23rd June 1951, Vol. 167, No. 4260, pp. 1028–1029.) Preliminary investigations on Ge, Si and Se rectifier cells and on Se photocells are reported. Current was measured with voltages from 0·2 to 50 mV applied in both the forward and reverse directions, and the temperature dependence of the zero-voltage resistance observed. Deviation of the results from the values given by the theoretical expression relating zero-voltage resistance to barrier height is ascribed to a lowering of the latter at temperatures below 300 K.

621.383 : 546.289 **3154**

Germanium Trigger Photocells.—F. A. Stahl. (*Elect. Engng, N.Y.*, June 1951, Vol. 70, No. 6, pp. 518–520.) 1951 A.I.E.E. Winter General Meeting paper. The occurrence of n-type and p-type Ge in the same crystal can give rise to trigger action upon excitation by infra-red radiation. The operating mechanism of the composite contact is explained. When used in on-off devices the on-current is high enough to develop useful power in low resistances.

621.383.27† **3155**

The Time Dependence of the Sensitivity of Photomultiplier Tubes.—M. Hillert. (*Brit. J. appl. Phys.*, June 1951, Vol. 2, No. 6, pp. 164–167.) An experimental investigation of fatigue and recovery effects in photomultipliers under typical operating conditions, particularly the change of sensitivity following a sudden change in illumination. An empirical formula is derived to express this effect, which is traced to phenomena occurring at the dynodes rather than at the photocathode; an electrical model representing their behaviour is outlined.

621.383.4 : 546.816.221 **3156**

The Characteristics of Long Period Photo-Effects in Lead Sulphide.—R. P. Chasmar & A. F. Gibson. (*Proc. phys. Soc.*, 1st July 1951, Vol. 64, No. 379B, pp. 595–602.) A photoconductive effect having a decay time of several hours has been observed in specially prepared layers of lead sulphide when maintained at low temperatures. These effects are characteristic of layers that have been treated in a certain manner with sulphur or with oxygen. No first-order differences are found between the properties of the layers containing O and those containing S. A physical explanation of the effect is advanced.

621.383.4 : 546.816.221 **3157**

The Sensitivity and Response Time of Lead Sulphide Photoconductive Cells.—A. F. Gibson. (*Proc. phys. Soc.*, 1st July 1951, Vol. 64, No. 379B, pp. 603–615.) Measurements were made with a view to establishing a theoretical model for photoconductors of this type. Variations of response time and sensitivity with temperature, background illumination, applied electric field and other parameters were investigated. The results give qualitative support to a theory postulating the existence of space-charge barriers at intercrystalline contacts, the height of these barriers being reduced on illumination.

621.383.42 **3158**

Investigation of the Influence of Photocurrent and External Resistance on the Spectral Sensitivity of Selenium Photocells.—I. Wolf. (*Ann. Phys., Lpz.*, 31st July 1950, Vol. 8, Nos. 1/2, pp. 30–40.) Two methods are discussed for measuring spectral sensitivity, viz., (*a*) using an illuminating source with uniform energy spectrum, and (*b*) with the photocurrent maintained constant. The spectral sensitivity varies in the former case with the intensity of the illumination, in the latter case with the value of the photocurrent, and in both cases with the value of the external resistance connected. A physical explanation is advanced.

621.384.5 : 621.316.722 **3159**

Variations in Extinction Voltages of Glow-Discharge Voltage-Regulator Tubes.—F. A. Benson. (*J. sci. Instrum.*, June 1951, Vol. 28, No. 6, p. 186.) "The extinction voltages of a large number of tubes covering 15 different types have been recorded. The effect of life on extinction voltage has also been determined."

621.384.5 : 621.396.662 **3160**

The Development of Tuning-Indicator Valves for Broadcast Receivers.—F. Malsch. (*Radio Mentor*, March 1951, Vol. 17, No. 3, pp. 124–129.) Review of development leading to the design of the EM71, a small loktal-base magic-eye valve giving a single wide-angle shadow sector. The cathode is offset from the axis of the valve, and the beam deflection is produced by a rod nearly parallel to the cathode, together with a symmetrically placed pair of auxiliary angle-plate electrodes held at target potential.

621.385 **3161**

New Vacuum Tube Materials.—A. P. Haase & E. B. Fehr. (*Tele-Tech*, June & July 1951, Vol. 10, Nos. 6 & 7, pp. 30–32 & 33–35.) Processing steps applied to terratex, a mica substitute, to render it suitable for use in valves are described, and properties of the material are compared with those of natural micas. Developments in the use of Al-clad Fe as a substitute for Ni are also reported.

621.385 : 621.397.62 **3162**

Characteristics of the New Transcontinental Series of Television Valves.—J. Moline. (*Radio franç.*, Feb. & April 1951, Nos. 2 & 4, pp. 16 & 22–24.) Details of a set of nine valves for use in television receivers.

621.385 : 681.142 **3163**

Systematization of Tube Surveillance in Large Scale Computers.—H. W. Spence. (*Elect. Engng, N.Y.*, July 1951, Vol. 70, No. 7, pp. 605–608.) 1951 A.I.E.E. Winter General Meeting paper. When failure occurs in the ENIAC computer all valves in the faulty circuit are replaced; the old valves are tested and results are logged on a card index. Results of the analysis of the data are presented, showing the average life of the various types. Details of the methods of testing and of the functions of the valves in the circuits are given.

621.385.012 **3164**

Electron Tube Ratings at Very High Altitudes.—R. J. Bibbero. (*Tele-Tech*, May 1951, Vol. 10, No. 5, pp. 42–44.) A discussion of the effects of altitude on envelope temperature and the extent to which anode dissipation must be derated to prevent excessive heating and reduction of valve life. Measurements are described and typical graphs included for specific valve types.

621.385.029.64 — 621.396.622.6 **3165**

Valves and Crystals for Ultra-high Frequencies.—(*Radio franç.*, April 1951, No. 4, pp. 14–18.) Productions of the Compagnie Française Thomson-Houston are described, with their working characteristics: these include the magnetron RHM 1232, giving a pulsed output of the order of 40 kW at 3 cm wavelength, the reflex klystron RHK 6332, for the same band, and Si-crystal mixers and detectors for the 3-cm and 10-cm bands.

621.385.029.64 **3166**

Electron Beams and Electromagnetic Waves.—R. Warnecke, O. Döhler & W. Kleen. (*Wireless Engr*, June 1951, Vol. 28, No. 333, pp. 167–176.) A generalized theory of interaction, restricted to the case of small signals and applicable to the behaviour of an electron beam in the drift space of a velocity-modulated valve; to the travelling-wave valve, including its operation at high current density; and to the properties of the electron-wave valve. Comparison is made with the theories of other workers.

621.385.029.64 : 537.533.72 **3167**

Space-Charge Effects in H.F. Modulated Electron Streams.—J. Labus. (*Ann. Phys., Lpz.*, 15th March 1951, Vol. 9, No. 1, pp. 6–18.) Dynamic space-charge effects, which arise in an initially neutral plasma as a result of the inability of the heavy ions to oscillate at high frequencies, have an adverse influence on the phase focusing of a beam. Static (i.e., time-invariable) electronic space charge, on the other hand, is advantageous in that it increases transit time. A differential equation for the electron velocity is developed, in which the coefficients are independent of position for vanishingly small values of static space charge. Starting from this static condition a solution is derived in terms of a disturbing parameter defined by the ratio of the space charge to the electronic charge. The closer the condition of a pure electron stream is approached, the smaller is the defocusing action of the dynamic space-charge effect compared with the static.

621.385.032.216 **3168**

Life of Valves with Oxide-Coated Cathodes.—C. C. Eaglesfield. (*Elect. Commun.*, June 1951, Vol. 28, No. 2, pp. 95–102.) Valve emission characteristics deteriorate due to the formation of a resistive barrier between the cathode core and the oxide coating, which gradually builds up to a normalized resistance value of about 40 Ω and then stays constant. The possibility of reducing the effects of this resistance by suitable circuit design is discussed briefly.

621.385.032.216 : 546.841-3 **3169**

Thoria as a Cathode Emitter.—W. E. Danforth. (*J. Franklin Inst.*, May 1951, Vol. 251, No. 5, pp. 515–520.) The characteristics of thoria are examined which render it in some cases more suitable as a cathode material than Ba/Sr oxides. Pulsed emission currents up to 4 A/cm² at 1 600°C and 15 A/cm² at 1 800°C can be obtained. The decay of emission with time is much slower than with Ba/Sr oxides, the time constants being of the order of 0·1 sec. The maximum d.c. emission, i.e., the equilibrium emission after decay, is between 1 and 5 A/cm². In pulsed applications the life of a thoria-coated cathode is determined by its evaporation rate. At 1 800°C the coating disappears at the rate of about 1 mil thickness in 300 hours.

621.385.15.012.6 : 537.525.92 **3170**

High-Speed Ten-Volt Effect.—R. M. Matheson & L. S. Nergaard. (*RCA Rev.*, June 1951, Vol. 12, No. 2, pp. 258–268.) The I/V curve for diodes with oxide-coated cathodes has been observed to depart from the Langmuir $\frac{3}{2}$-power law for anode voltages greater than 10 V. Experiments indicate that the departure is due to secondary emission of electrons from a layer of BaO formed on the anode.

621.385.2 **3171**

Potential and Gradient Distributions in Parallel Plane Diodes at Currents below Space-Charge-Limited Values.—W. M. Brubaker. (*Phys. Rev.*, 15th July 1951, Vol. 83, No. 2, pp. 268–270.) Solutions for the equations of electron motion in a plane diode, taking space charge into account, are derived in terms of four dimensionless parameters related respectively to current density, potential, distance from cathode, and potential gradient at cathode. For one particular distance the gradient is independent of the current density.

621.385.2 **3172**

Determination of the Point Representing the Saturation of a Diode on an Experimental log I = f(√F) Curve.—H. Bonifas. (*C. R. Acad. Sci., Paris*, 4th June 1951, Vol. 232, No. 23, pp. 2082–2084.) Quantum-theory considerations are applied to an examination of the field conditions at the surface of a thermionic cathode, assuming a Maxwellian distribution of emission velocities, and a formula is derived relating the anode and cathode fields (F and H_0 respectively) and the current (I). At saturation current the resultant field at the cathode surface is zero, log I passing through a maximum or an inflection point with horizontal tangent. Confirmatory experiments have been made with cathodes of various types, and a 'universal' value of the order of 10 kV/cm is found for H_0, while the 'radius of action of the surface atom' is estimated at $3{\cdot}8 \times 10^{-6}$ cm.

621.385.2 **3173**

Microwave Diode Conductance in the Exponential Region of the Characteristic.—G. Diemer. (*Philips Res. Rep.*, June 1951, Vol. 6, No. 3, pp. 211–223.) A transit-time theory is developed, assuming a linear retarding field and ignoring electron interaction. For diodes with close anode-cathode spacing, the value of the conductance over the exponential part of the characteristic, for anode voltages between −2 V and −1 V, may considerably exceed the total-emission conductance even in the microwave band. Application of the theory to earlier measurements on closely spaced diodes reduces the existing discrepancy between theoretical and experimental results.

621.385.2 **3174**

Space-Charge Distribution, Characteristic, and Current Fluctuations in 'Double Diodes'.—R. Fürth. (*Proc. phys. Soc.*, 1st May 1951, Vol. 64, No. 377B, pp. 404–412.) "The distribution of space charge and potential in thermionic tubes with two hot electrodes ('double diodes') is derived by the method of statistical mechanics for plane parallel electrodes, first for tubes in true thermodynamic equilibrium, and then, approximately, for tubes with applied external voltage or with electrodes at slightly different temperatures. The dependence of current on voltage in the first case (characteristic), and on temperature difference in the second case is calculated. Finally, a general expression for the current fluctuations ('noise') in double diodes is given and discussed. The application of this formula to other types of conductors is also indicated."

621.385.2.01 : 621.396.822 **3175**

Theory and Experiments on Electrical Fluctuations and Damping of Double-Cathode Valves.—K. S. Knol & G. Diemer. (*Philips Res. Rep.*, Feb. 1951, Vol. 6, No. 1, p. 14.) Correction to papers abstracted in 791 of 1950 and 507 of February.

621.385.3 : 537.212 **3176**

The Penetration Factor and the Potential Field of a Planar Triode.—P. H. J. A. Kleijnen. (*Philips Res. Rep.*, Feb. 1951, Vol. 6, No. 1, pp. 15–33.) A calculation of the penetration factor is given which is valid for all values of grid-wire diameter and anode-grid spacing. This calculation being too complicated for general practical use, the numerical evaluation is given for a large number of electrode configurations. The results are compared with those obtained from previously derived formulae.

621.385.3 : 546.289 **3177**

***p-n* Junction Transistors.**—W. Shockley, M. Sparks & G. K. Teal. (*Phys. Rev.*, 1st July 1951, Vol. 83, No. 1, pp. 151–162.) "The effects of diffusion of electrons through a thin *p*-type layer of germanium have been studied in specimens consisting of two *n*-type regions with the *p*-type region interposed. It is found that potentials applied to one *n*-type region are transmitted by diffusing electrons through the *p*-type layer although the latter is grounded through an ohmic contact. When one of the *p-n* junctions is biased to saturation, power gain can be obtained through the device. Used as '*n-p-n* transistors' these units will operate on currents as low as 10 μA and voltages as low as 0·1 V, have power gains of 50 db, and noise figures of about 10 db at 1 000 c/s. Their current/voltage characteristics are in good agreement with the diffusion theory."

621.385.3.029.63 **3178**

A 1·5-kW 500-Mc/s Grounded-Grid Triode.—C. E. Fay, D. A. S. Hale & R. J. Kircher. (*Proc. Inst. Radio Engrs*, July 1951, Vol. 39, No. 7, pp. 800–803.) The triode described is of planar design, operated at an anode voltage of 3 kV and water-cooled. Copper is used as the grid material, to reduce its thermionic emission. The apparent efficiency at 500 Mc/s, with an output of 1·5 kW, is 55%, and the power gain 6·5.

621.385.5.011.2 **3179**

The Internal Resistance of a Pentode.—J. L. H. Jonker. (*Philips Res. Rep.*, Feb. 1951, Vol. 6, No. 1, pp. 1–13.) Analysis of R_i, defined as $\partial V_a/\partial I_a$ with the grid potentials fixed. For output pentodes the electrostatic influence of the anode potential on the cathode current produces the main contribution. In h.f. pentodes the most important effect is that of the electrons collected by the screen grid after being reflected by either the suppressor grid or the anode. Comparison of the theoretical and measured values of R_i for EF6, EF50, EL3, EL50 and AF7 valves shows rough agreement; the possible reasons for discrepancy are discussed.

621.385.832 **3180**

Switch and Storage Tubes.—L. S. Allard & R. T. Hill. (*Wireless Engr*, June 1951, Vol. 28, No. 333, pp. 187–191.) Brief descriptions are given of a number of tubes, including an indication of the type of service for which they are suitable, methods of construction, and performance. Precautions necessary to eliminate spurious signals in the case of storage tubes with fluorescent screens are discussed.

621.385.832 : 621.3.087 **3181**

The Recording Storage Tube.—R. C. Hergenrother & B. C. Gardner. (*Proc. Inst. Radio Engrs*, July 1951, Vol. 39, No. 7, p. 806.) Correction to paper noted in 2942 of 1950.

621.385.832 : 621.397.6 **3182**

Graphechon Writing Characteristics.—A. H. Benner & L. M. Seeberger. (*RCA Rev.*, June 1951, Vol. 12, No. 2, pp. 230–250.) The results of an experimental investigation are presented. Graphs are given for calculating the performance of graphechons as storage devices for radar p.p.i. displays. By integrating successive radar pulses, improvement of signal/noise ratio can be obtained.

621.385.832 : 621.397.621.2 **3183**

Improved Electron-Gun Ion Traps.—C. S. Szegho & T. S. Noskowicz. (*Tele-Tech*, June 1951, Vol. 10, No. 6, pp. 45–47.) The design is based on parallel displacement of the anode axis from the cathode-grid axis. Negative ions and electrons are equally deflected by the electrostatic field caused by this displacement: subsequent magnetic deflection separates the ions from the electrons, the latter being guided through a small aperture in the anode. The design ensures good spot roundness. Correct axial displacement in assembly is facilitated by using a fluorescent coating on the outside of the anode.

621.396.615.141.2 **3184**

Low-Voltage Tunable X-Band Magnetron Development.—G. A. Espersen & B. Arfin. (*Tele-Tech*, June & July 1951, Vol. 10, Nos. 6 & 7, pp. 50–51, 84 & 30–31, 70.) Description of the Type PAX3 magnetron. The tuning range is 9·300–9·320 kMc/s, peak power output is 50 W minimum, weight $<2{\cdot}5$ lb. Frequency is stable to within ± 3 Mc/s over a temperature range of 80°C.

621.396.615.141.2 **3185**

The Magnetron in the Cut-Off State; Transition from Cylindrical to Planar Case.—J. L. Delcroix. (*C. R. Acad. Sci., Paris*, 18th June 1951, Vol. 232, No. 25, pp. 2298–2300.) The planar magnetron has been treated elsewhere as the limiting case of the cylindrical magnetron when the radii of cut-off surface (b) and cathode (a) tend to equality, but this holds only if a tends simultaneously to ∞. A critical value of b/a exists for which the Brillouin and bidromic states become identical. The distribution of the space charge for the bidromic case with b/a nearly equal to the critical value is discussed, and a correct method for effecting the transition from the cylindrical to the planar case is presented.

621.396.615.141.2 **3186**

An Experimental Investigation of the Electron Orbits in a Magnetron.—R. Svensson. (*Proc. Inst. Radio Engrs*, July 1951, Vol. 39, No. 7, p. 838.) An experimental tube for investigating non-oscillating magnetrons is described. Photographs of the traces observed on a fluorescent screen are consistent with electron orbits of cycloidal character. Modifications for use with an oscillating magnetron are suggested.

621.396.615.142.2 : 537.291 : 537.525.92 **3187**

The Influence of Space Charge on the Phase Focusing of Electron Beams.—F. Borgnis: J. Labus. (*Z. Naturf.*, March 1950, Vol. 5a, No. 3, pp. 175–176.) Comment on paper noted in 3568 of 1948 (Labus) and author's reply.

MISCELLANEOUS

014.5 : 05 Electronics **3188**

Electronics Cumulative Index, 1930-1939.—(*Electronics, Annual Buyers' Guide Issue*, June 1951, Vol. 24, No. 6A, pp. C1–C36.) Alphabetical subject and author indexes are given for all articles in *Electronics* during the first 10 years of publication. It is planned to publish similar indexes for the period 1940–1949 in the 1952 Buyers' Guide Issue.

058.7 **3189**

Alphabetical Listings of All Components, Complete Units and Allied Products used in Electronic Equipment for All Purposes.—(*Electronics, Annual Buyers' Guide Issue*, June 1951, Vol. 24, No. 6A, pp. D1–D168.) Lists are given of the products of more than 2 500 American manufacturers. A trade-name index and a list of distributors are also included.

621.3 **3190**

Electricity at the 35th Swiss Industries Fair at Basle.—(*Bull. schweiz. elektrotech. Ver.*, 24th March 1951, Vol. 42, No. 6, pp. 162–198.) Illustrated review of equipment shown, including power units, regulators, meters, etc.

621.396.029.6 **3191**

Grundlagen der Höchstfrequenztechnik (Principles of Very-High-Frequency Engineering). [Book Review]—F. W. Gundlach. Publishers: Springer Verlag, Berlin/Göttingen/Heidelberg & J. F. Bergmann, München, 1950, 499 pp., 48 DM. (*Z. Ver. dtsch. Ing.*, 1st June 1951, Vol. 93, No. 16, p. 456.) A comprehensive work, of the greatest value for engineers and others; knowledge of the theory of electrodynamics is assumed.

ABSTRACTS AND REFERENCES INDEX

The Index to the Abstracts and References published throughout the year is in course of preparation and will, it is hoped, be available in February, price 2s. 8d. (including postage). As supplies are limited our Publishers ask us to stress the need for early application for copies. Included with the Index is a selected list of journals scanned for abstracting, with publishers' addresses.

INDEX

MONTH PAGE

ABSTRACTS AND REFERENCES (*see Special Index published separately, priced 2s. 8d., including postage*)
Aerial, Dielectric Lens, D. G. Kiely .. .. Oct. 299
—— Radiation Patterns, Microwave, D. G. Kiely and A. E. Collins .. .. .. Jan. 23
Aerials, Aperiodic, R. Bailey .. .. .. July 208
—— in Close Proximity, R. G. Medhurst .. Dec. 356
——, Mutual Impedance of Parallel, (*Correspondence*) .. .. Feb. 67
——, Mutual Impedance of Wire, L. Lewin .. Dec. 352
——, Parabolic Cylinder, D. G. Kiely .. Mar. 73
—— with Shaped Radiation Patterns, Dielectric, D. G. Kiely .. .. .. June 177
Amplification, Distributed (*Correspondence*) .. Dec. 373
Amplifier, High-Gain Magnetic, R. Feinberg .. May 151
—— of Variable Output Impedance, R. Yorke and K. R. McLachlan .. .. .. July 222
Amplifiers, Shunt-Regulated, V. J. Cooper .. May 132
Aperiodic Aerials, R. Bailey .. .. .. July 208
Auto-Correlation Function (*Correspondence*) .. Jan. 31
Automatic Atmospherics-Waveform Recorder, C. Clarke and D. E. Mortimer .. .. Dec. 359

BOOKS:
A.C./D.C. Test Meters, W. H. Cazaly and Thomas Roddam .. .. Oct. 315
Acceleration of Particles to High Energies (Inst. of Physics) .. .. Jan. 34
Advanced Theory of Waveguides, L. Lewin Dec. 374
Antenna Theory and Design, H. P. Williams (*Review*) .. .. Jan. 33
B.B.C. Year Book 1951 .. .. .. Jan. 34
British Standard for Dry Batteries for Domestic Radio Receivers, B.S.1766:1951 Dec. 374
British Standard for Graphical Symbols used in Waveguide Technique, Sept. 286; (*Review*) Dec. 374
British Standards Year Book, 1951 .. Dec. 374
Das Trockengleichrichter-Vielfachmessgerät, Theodor Walcher .. .. Jan. 34
Die wissenschaftlichen Grundlagen der Elektrotechnik, Heinz Schönfeld (*Review*) Sept. 290
Drahtloser Überseeverkehr, Paul Kotowski and Hans Sobotka .. .. Jan. 34
Electromagnetic Fields: Vol. 1, Mapping of Fields, Ernest Weber .. .. .. July 228
Electromagnetic Waves and Radiating Systems, E. C. Jordan (*Review*) .. .. Sept. 289
Electronics, P. Parker .. .. .. Sept. 290
Electrophysiological Technique, C. J. Dickinson (*Review*) .. .. .. Apr. 130
Electrostatic Induction between Power Lines and Telephone Lines, H. R. J. Klewe .. Sept. 286
Elliott Journal .. .. Sept. 286
Father of Radio, Lee de Forest (*Review*) .. Apr. 129
Fundamentals of Acoustics, Lawrence E. Kinsler and Austin R. Frey (*Review*) .. Nov. 349
Glossary of Piezeo-electric Terms. Supp. No. 5 to B.S. 204 .. .. Dec. 374
Guide to Broadcasting Stations .. .. Nov. 349
Heaviside Centenary Volume, I.E.E. .. Jan. 34
Hyperfréquences, Les, J. Voge .. .. Oct. 315
Integral Transforms in Mathematical Physics, C. J. Tranter (*Review*) .. .. Oct. 315

BOOKS—*continued* MONTH PAGE
Interference from Industrial R.F. Equipment—Performance of Screening Rooms, J. Miedzinski and S. F. Pearce .. .. Aug. 247
Lewis's Medical, Scientific and Technical Lending Library Catalogue .. .. Aug. 247
Limits of Radio Interference, B.S. 800: 1951 (*Review*) .. .. Dec. 374
Messungen und Untersuchungen an Rundfunkgeräten, Hubert Gibas .. .. Jan. 34
Microphysical World, William Wilson .. Sept. 290
Microwave Measurements, H. M. Barlow and A. L. Cullen (*Review*) .. .. .. Apr. 129
Nomogram, The, H. J. Allcock and J. Reginald Jones (*Review*) .. .. .. Feb. 68
Oxford Junior Encyclopædia .. .. May 164
Plastics Progress .. .. Dec. 374
Practical Wireless Encyclopædia, F. J. Camm .. .. May 164
Progressive Mathematics, P. Clyne (*Review*) Jan. 33
Radio Circuits: A Step-by-Step Survey of Superhet Receivers, W. E. Miller .. Aug. 247
Radio Communication at Ultra High Frequency, John Thomson (*Review*) .. Apr. 130
Radio Engineering Handbook .. .. Jan. 34
Radio Installations, W. E. Pannett (*Review*) Sept. 289
Radio Research 1933–48, D.S.I.R. Report .. Jan. 34
Radio Valve Data .. .. Sept. 290
Radiolocation, Marconi's International Marine Co. .. .. Aug. 247
Report of the Radio Research Board for 1949 .. .. Sept. 286
Semi-Conductors, D. A. Wright (*Review*) .. May 164
Sequential Inspection Plan for Radio Interference Testing, S. F. Pearce and H. Goldenberg .. .. July 228
Super-Regenerative Receivers, J. R. Whitehead (*Review*) .. .. Jan. 34
Telecommunication Principles, R. N. Renton (*Review*) .. .. July 228
Television Explained, W. E. Miller .. Sept. 290
Television in your Home, W. E. Miller .. Aug. 247
Television Receiving Equipment, W. T. Cocking .. .. Aug. 247
Theory and Design of Valve Oscillators, H. A. Thomas (*Review*) .. .. .. Dec. 374
Time Bases, O. S. Puckle (*Review*) .. .. June 194
Transformers, F. C. Connelly (*Review*) .. Feb. 68
Traveling Wave Tubes, J. R. Pierce .. Sept. 290
Valve and Circuit Noise, Radio Research Special Report No. 20 .. .. .. Mar. 97
Voltage Stabilizers, F. A. Benson (*Review*) .. Mar. 97
Wireless and Electrical Trader Year Book, 1951 .. .. Aug. 247
British Institution of Radio Engineers' Convention, Apr. 125 .. .. .. June 194
—— Standards Exhibition .. .. .. May 164
Broadcasting Committee's Report .. .. Feb. 54

CALIBRATOR for L.F. Phase Meters, Precision, M. F. Wintle, July 197; (*Correspondence*) .. .. Oct. 320
Camera Tubes, Television, L. H. Bedford, Jan. 4; (*Correspondence*) .. May 163, Sept. 288, 289
Car Ignition Radiation, C. C. Eaglesfield .. Jan. 17

MONTH PAGE

Cathode-Follower Input Impedance, J. E. Flood .. .. Aug. 231
Circuit Theorem (*Correspondence*) .. .. Mar. 98
CORRESPONDENCE:
Auto-Correlation Function, D. A. Bell .. Jan. 31
Circuit Theorem, M. V. Callender .. .. Mar. 98
Distributed Amplification, H. G. Bassett and J. R. Tillman .. .. Dec. 373
Impedances in Parallel, C. R. G. Reed, Jan. 32; Laurence Batchelder, F. A. Benson, Apr. 128; M. O. Deighton .. .. July 226
Induced Grid Noise in Triodes, A. vander-Ziel .. .. July 226
Maintaining Oscillations by the Periodic Variation of *L* or *C*, N. Minorsky .. May 163
Mutual Impedance of Parallel Aerials, R. G. Medhurst; S. D. Pool .. .. .. Feb. 67
Narrow-Pulse Generator, S. F. Pearce and D. C. G. Smith, July 225; C. S. Fowler .. July 226
Resonance Curve of Two Coupled Circuits, Kj. Prytz .. .. Nov. 350
Star-Delta Theorem, Emrys Williams .. Sept. 258
Stepping-Counter Analogy, B. Berger .. Oct. 320
Surface-Wave Transmission Line, H. M. Barlow, Feb. 67; R. H. Nelson .. .. May 162
Synthesis of 2n-Terminal Networks, V. Belevitch .. .. Apr. 126
Television Camera Tubes, E. L. C. White and J. D. McGee, May 163; Sept. 289; L. H. Bedford .. .. Sept. 288
Television Waveform Display, H. B. S. Brabham .. .. Nov. 350
Transmission-Line Equivalent Circuit, L. A. Ware .. .. Sept. 287
Twin-T Circuits, S. C. Dunn .. .. May 162
Voltage-Controlled Secondary-Emission Multipliers, P. F. M. Gloess .. .. June 194
Wide-band Two-Phase Networks, H. J. Orchard; W. Saraga .. .. .. Jan. 30
Coupled Circuits, Resonance Curve of Two, (*Correspondence*) .. .. Nov. 350
Cross-Modulation, Ionospheric, I. J. Shaw .. Nov. 335
Crystals in Flexural Vibration, Piezoelectric, Hartmut Keller .. .. June 179

DIELECTRIC Aerials with Shaped Radiation Patterns, D. G. Kiely .. .. June 177
—— Lens Aerial, D. G. Kiely .. .. Oct. 299
Dipole Aerials in Close Proximity, R. G. Medhurst .. .. Dec. 356
Directional-Coupler Errors, F. A. Benson .. Dec. 371
Distributed Amplification (*Correspondence*) .. Dec. 373

ECCLES-Jordan Circuit, Transition of, J. R. Tillman .. .. Apr. 101
Echoes, Visibility of Radar, A. W. Ross .. Mar. 79
Eckersley, T. L., awarded Faraday Medal .. Feb. 68
EDITORIALS:
Electrical and Magnetic Units .. .. Nov. 322
Electromagnetic Momentum of Space .. Feb. 35
Electromotive Force .. .. Sept. 260
Electrostatic D.C. Transformer .. .. Oct. 291
L.R. Load Circuit .. .. Aug. 229
Maintaining Oscillations by Periodic Variation of *L* or *C*, Mar. 69; (*Correspondence*) May 163
Negative Feedback Circuits .. .. June 165
Photographing Sound and Microwave Space Patterns .. .. Dec. 351
Poynting's Theorem .. .. .. Sept. 259
Reduction of Skin-Effect Losses .. .. Nov. 321
Refracting Sound Waves .. .. .. Jan. 1
Saw-Tooth Generators .. .. .. May 131

EDITORIALS—*continued* MONTH PAGE
Valve Operating Conditions .. .. July 195
Velocity of Light, Apr. 99; (*Erratum*) .. Nov. 350
Electrical and Magnetic Units (*Editorial*) .. Nov. 322
Electromagnetic Momentum of Space (*Editorial*) .. .. Feb. 35
Electromotive Force (*Editorial*) .. .. Sept. 260
Electron Beams and Electromagnetic Waves, R. Warnecke, O. Döhler and W. Kleen .. June 167
Electronic Ram, W. Raudorf .. .. .. July 215
Electrostatic D.C. Transformer (*Editorial*) .. Oct. 291
Equalizers, Waveform Systems and Time, D. C. Espley .. .. Aug. 251
Equivalent Circuit, Transmission Line (*Correspondence* .. .. Sept. 287
Exhibition, National Radio (*Editorial*), Sept. 260; (*Review*) .. .. Oct. 315

FARADAY Medal awarded to T. L. Eckersley Feb. 68
Ferromagnetic Laminae, H.F. Magnetization of, O. I. Butler and H. R. Chablani .. Mar. 92
Flicker in Television Pictures, J. Haantjes and F. W. de Vrijer .. .. Feb. 40
Flywheel Synchronizing Circuit, A. B. Starks-Field .. .. Oct. 293
Forecasting Sunspot Variations to 1957, A. F. Wilkins .. .. Oct. 298
Function, Auto-Correlation, (*Correspondence*) Jan. 31

GILL, Sir Archibald .. .. .. Sept. 286
Grid Noise in Triodes, Induced, (*Correspondence*) .. .. July 226

H.F. Magnetization of Ferromagnetic Laminae, O. I. Butler and H. R. Chablani .. .. Mar. 92
High-Gain Magnetic Amplifier, R. Feinberg .. May 151

I.E.E. Television Convention .. .. .. Oct. 297
Iconoscopes, Impedance Changes in Image, J. E. Cope and R. Theile .. .. Aug. 239
Impedance and the Laplace Transform, Edward E. Ward .. .. June 192
Impedances in Parallel (*Correspondence*), Jan. 32; Apr. 128; .. .. .. July 226
Induced Grid Noise in Triodes (*Correspondence*) July 226
Institute of Physics Examination .. .. Oct. 297
Interelectrode Impedances in Triodes and Pentodes, E. E. Zepler and S. S. Srivastava May 146
Interference: Car Ignition Radiation, C. C. Eaglesfield .. .. Jan. 17
Interference in Multi-Channel Circuits, L. Lewin (*Erratum*) .. .. Mar. 98
Ionosphere: Forecasting Sunspot Variations to 1957, A. F. Wilkins .. .. .. Oct. 298
Ionospheric Cross-Modulation, I. J. Shaw .. Nov. 335
—— Storms and Radio Circuit Disturbances, C. M. Minnis .. .. Feb. 43
—— Recorders, Use for Aperiodic Aerials with Vertical-Incidence, R. Bailey .. .. July 208

L.F. Phase-Meters, Precision Calibrator for, M. F. Wintle, July 197; (*Correspondence*) Oct. 320
L.R. Load Circuit (*Editorial*) .. .. .. Aug. 229
Laplace Transform, Impedance and, Edward E. Ward .. .. June 192
Light, Velocity of, (*Editorial*), Apr. 99; (*Erratum*) .. .. Nov. 350
Linear Diode Voltmeter, R. E. Burgess .. Nov. 342

M.K.S. Units, Aug. 258; (*Correction*) .. Sept. 286
Magnetic Amplifier, High-Gain, R. Feinberg .. .. May 151
—— Modulator, R. Feinberg .. .. .. Sept. 281

MONTH PAGE

Magnetization of Ferromagnetic Laminae, H.F., O. I. Butler and H. R. Chablani .. Mar. 92
Maintaining Oscillations by Periodic Variation of *L* or *C* (*Editorial*) Mar. 69; (*Correspondence*) May 162
Meter and Mismatch Indicator, Power, A. F. Boff .. .. Sept. 278
Microwave Aerial Radiation Patterns, D. G. Kiely and A. E. Collins .. .. .. Jan. 23
—— Lens, Path-Length, D. G. Kiely .. Aug. 248
Monotonic Characteristics, Conditions for,: Transient Response, I. F. MacDiarmid .. Nov. 330
Multipliers, Secondary-Emission Voltage-Controlled, A. J. W. M. van Overbeek, Apr. 114; (*Correspondence*) .. .. .. June 194
Mutual Impedance of Parallel Aerials (*Correspondence*) .. .. Feb. 67
—— Impedance of Wire Aerials, L. Lewin .. Dec. 352

N.P.L. Open Day .. .. Apr. 125
Narrow-Pulse Generator (*Correspondence*) July 225
Negative-Feedback Circuits (*Editorial*) .. June 165
Network for Pulse Transmission, RC-Coupling, Hilary Moss .. .. Nov. 345
Networks, Synthesis of 2n-Terminal (*Correspondence*) .. .. Apr. 126
——, Triode Transmission, A. W. Keen, Feb. 56; (*Erratum*) .. .. Mar. 98
——, Wideband Two-Phase, (*Correspondence*) Jan. 30
Noise in Triodes, Induced Grid, (*Correspondence*) .. .. July 226
Nomenclature, Systems of Units and,.. .. Apr. 126

OPTIMUM Spacing of Broadcast Transmitters, D. C. Espley .. .. .. Feb. 37
Oscillations, Maintaining, by the Periodic Variation of *L* or *C* (*Editorial*), Mar. 69; (*Correspondence*) .. .. May 162
Oscillator, Wide-Range Variable Frequency, A. Cormack .. .. Sept. 266

P.O. Engineer-in-Chief, Retirement of Sir Archibald Gill .. .. Sept. 286
Parabolic Cylinder Aerials, D. G. Kiely .. Mar. 73
Path-Length Microwave Lens, D. G. Kiely .. Aug. 248
Phase-Meters, Precision Calibrator for L.F., M. F. Wintle, July 197; (*Correspondence*) Oct. 320
Photographing Sound and Microwave Space Patterns (*Editorial*) .. .. .. Dec. 351
Physical Society's Exhibition, Feb. 66; .. May 156
Piezoelectric Crystals in Flexural Vibration, Hartmut Keller .. .. June 179
Power Meter and Mismatch Indicator, A. F. Boff .. .. Sept. 278
Poynting's Theorem (*Editorial*) .. .. Sept. 259
Precision Calibrator for L.F. Phase-Meters, M. F. Wintle, July 197; (*Correspondence*) Oct. 320
Premiums for Technical Writing .. .. Dec. 358
Propagation: Forecasting Sunspot Variations to 1957, A. F. Wilkins .. .. .. Oct. 298
——: Ionospheric Cross-Modulation, I. J. Shaw .. .. Nov. 335
——: Ionospheric Storms and Radio Circuit Disturbances, C. M. Minnis .. .. Feb 43
——: Time-Delay Measurements on Radio Transmissions, R. Naismith and E. N. Bramley .. .. Sept. 271
Pulse Generator, Narrow, (*Correspondence*) .. July 225
—— Transmission, RC-Coupling Network for, Hilary Moss, Nov. 345; (*Erratum*) .. Dec. 374

MONTH PAGE

RC-COUPLING Network for Pulse Transmission, Hilary Moss, Nov. 345; (*Erratum*) Dec. 374
R.E.C.M.F. Exhibition .. .. .. Feb. 66
Radar Echoes, Visibility of, A. W. Ross .. Mar. 79
Radiation from Resonant Quarter-Wave Transmission Lines, F. M. Leslie .. Mar. 70
Receivers for Use at 460 Mc/s, E. G. Hamer and L. J. Herbst .. .. Nov. 323
Reduction of Skin-Effect Losses (*Editorial*) .. Nov. 321
Refracting Sound Waves (*Editorial*) .. .. Jan. 1
Report of Broadcasting Committee .. .. Feb. 54
Resonance Curve of Two Coupled Circuits (*Correspondence*) .. .. Nov. 350

SAW-TOOTH Generators (*Editorial*) .. May 131
Secondary-Emission Multipliers, Voltage-Controlled, A. J. W. M. van Overbeek, Apr. 114; (*Correspondence*) .. .. June 194
Shunt-Regulated Amplifiers, V. J. Cooper .. May 132
Skin-Effect Losses, Reduction of, (*Editorial*).. Nov. 321
Sound Waves, Refracting, (*Editorial*) .. Jan. 1
South Bank Exhibition .. .. .. Apr. 125
Star-Delta Theorem (*Correspondence*) .. Aug. 258
Stepping-Counter Analogy (*Correspondence*) .. Oct. 320
Superheterodyne Receivers, Tracking of, H. S. de Koe .. .. Oct. 305
Surface-Wave Transmission Line (*Correspondence*) Feb. 67; .. .. May 162
Switch and Storage Tubes, L. S. Allard and R. T. Hill .. .. June 187
Synchronizing Circuit, Flywheel, A. B. Starks-Field .. .. Oct. 293
Synthesis of 2n-Terminal Networks (*Correspondence*) .. .. Apr. 128
Systems of Units and Nomenclature .. Apr. 126

TELEVISION Camera Tubes, L. H. Bedford, Jan. 4; (*Correspondence*) May 163; Sept. 288, 289
—— Pictures, Flicker in, J. Haantjes and F. W. de Vrijer .. .. Feb. 40
—— Stations Map .. .. Feb. 55
—— Waveform Display, K. R. Sturley, Sept. 261; (*Correspondence*) .. .. .. Nov. 350
——: Flywheel Synchronizing Circuit, A. B. Starks-Field .. .. Oct. 293
——: Impedance Changes in Image Iconoscopes, J. E. Cope and R. Theile .. Aug. 239
——: Shunt-Regulated Amplifiers, V. J. Cooper .. .. May 132
Theorem, Circuit, (*Correspondence*) .. .. Mar. 98
——, Poynting's, (*Editorial*) .. .. .. Sept. 259
——, Star-Delta, (*Correspondence*) .. .. Aug. 258
Time-Delay Measurements on Radio Transmissions, R. Naismith and E. N. Bramley Sept. 271
'Time Equalizers', Waveform Systems and, D. C. Espley .. .. Aug. 251
Tracking of Superheterodyne Receivers, H. S. de Koe .. .. Oct. 305
Transformer, Electrostatic D.C., (*Editorial*) .. Oct. 291
Transient Response, I. F. Macdiarmid .. Nov. 330
Transition of an Eccles-Jordan Circuit, J. R. Tillman .. .. Apr. 101
Transmission Line Equivalent Circuit (*Correspondence*) .. .. Sept. 287
—— ——, Surface-Wave, (*Correspondence*) Feb. 67; May 162
—— Lines, Radiation from Resonant Quarter-Wave, F. M. Leslie .. .. .. Mar. 70
Transmitters, Optimum Spacing of Broadcast, D. C. Espley .. .. Feb. 37
Travelling-Wave Tubes with Dispersive Helices, F. N. H. Robinson .. .. Apr. 110

MONTH PAGE

Travelling-Wave Tubes: Electron Beams and Electro-magnetic Waves, R. Warnecke, O. Döhler and W. Kleen .. .. .. June 167
Triode Transmission Networks, A. W. Keen, Feb. 56; (*Erratum*) .. .. .. Mar. 98
Triodes, Induced Grid Noise in, (*Correspondence*) .. .. July 226
Tubes, Switch and Storage, L. S. Allard and R. T. Hill .. .. June 187
Twin-T Circuits (*Correspondence*) .. .. May 162

UNITS and Nomenclature, Systems of .. Apr. 126
——, Electrical and Magnetic, (*Editorial*) Nov. 322
——, M.K.S., Aug. 258; (*Correction*) .. .. Sept. 286

VALVE Input Conductance at V.H.F., E. E. Zepler .. .. Feb. 51
—— Operating Conditions (*Editorial*) .. July 195
Valves: Induced Grid Noise in Triodes (*Correspondence*) .. .. July 226
Valves: Interelectrode Impedances in Triodes and Pentodes, E. E. Zepler and S. S. Srivastava .. .. May 146
Velocity of Light (*Editorial*), Apr. 99; (*Erratum*) Nov. 350
Visibility of Radar Echoes, A. W. Ross .. Mar. 79
Voltage-Controlled Secondary-Emission Multipliers, A. J. W. M. van Overbeek, Apr. 114; (*Correspondence*) .. .. .. June 194
Voltmeter, Linear Diode, R. E. Burgess .. Nov. 342

WAVEFORM Display, Television, K. R. Sturley, Sept. 261; (*Correspondence*) .. Nov. 350
—— Recorder Automatic Atmospherics-, C. Clarke and D. E. Mortimer .. .. Dec. 359
—— Systems and 'Time Equalizers', D. C. Espley .. .. Aug. 251
Wide-Band Two-Phase Networks (*Correspondence*) .. .. Jan. 30
Wide-Range Variable-Frequency Oscillator, A. Cormack .. .. Sept. 266
Writing, Premiums for Technical, ... Dec. 358

INDEX TO AUTHORS

MONTH PAGE

ALLARD, L. S., and HILL, R. T. .. .. June 187

BAILEY, R. .. .. July 208
BEDFORD, L. H. .. .. Jan. 4
BENSON, F. A. .. .. Dec. 371
BOFF, A. F. .. .. Sept. 278
BRAMLEY, E. N., with NAISMITH, R. .. .. Sept. 271
BURGESS, R. E. .. .. Nov. 342
BUTLER, O. I., and CHABLANI, H. R. .. Mar. 92

CHABLANI, H. R., with BUTLER, O. I. .. Mar. 92
CLARKE, C. and MORTIMER, D. E. .. .. Dec. 359
COLLINS, A. E., with KIELY, D. G. .. .. Jan. 23
COOPER, V. J. .. .. May 132
COPE, J. E., and THEILE, R. .. .. .. Aug. 239
CORMACK, A. .. .. Sept. 266

DÖHLER, O., with WARNECKE, R., and KLEEN, W. .. .. June 167

EAGLESFIELD, C. C. .. .. Jan. 17
ESPLEY, D. C., Feb. 37; .. .. .. Aug. 251

FEINBERG, R., May 151; .. .. .. Sept. 281
FLOOD, J. E. .. .. Aug. 231

HAANTJES, J., and DE VRIJER, F. W. .. Feb. 40
HAMER, E. G., and HERBST, L. J. .. .. Nov. 323
HERBST, L. J., with HAMER, E. G. .. .. Nov. 323
HILL, R. T., with ALLARD, L. S. .. .. June 187

KEEN, A. W. .. .. Feb. 56
KELLER, HARTMUT .. .. June 179
KIELY, D. G., Mar. 73; June 177; Aug. 248 .. Oct. 299
KIELY, D. G., and COLLINS, A. E. .. .. Jan. 23
KLEEN, W., with WARNECKE, R., DÖHLER, O., and KLEEN, W. .. .. June 167
KOE, H. S. DE .. .. Oct. 305

LESLIE, F. M. .. .. Mar. 70
LEWIN, L. .. .. Dec. 352

MACDIARMID, I. F. .. .. Nov. 330
MCLACHLAN, K. R., with YORKE, R. .. July 222
MEDHURST, R. G. .. .. Dec. 356
MINNIS, C. M. .. .. Feb. 43
MORTIMER, D. E. with CLARKE, C. .. .. Dec. 359
MOSS, HILARY .. .. Nov. 345

NAISMITH, R., and BRAMLEY, E. N. .. .. Sept. 271

OVERBEEK, A. J. W. M. VAN .. .. .. Apr. 114

RAUDORF, W. .. .. July 215
ROBINSON, F. N. H. .. .. Apr. 110
ROSS, A. W. .. .. Mar. 79

SHAW, I. J. .. .. Nov. 335
SRIVASTAVA, S. S., with ZEPLER, E. E. .. May 146
STARKS-FIELD, A. B. .. .. Oct. 293
STURLEY, K. R. .. .. Sept. 261

THEILE, R., with COPE, J. E. .. .. Aug. 239
TILLMAN, J. R. .. .. Apr. 101

VRIJER, F. W. DE, with HAANTJES, J. .. Feb. 40

WARD, EDWARD E. .. .. June 192
WARNECKE, R., DÖHLER, O., and KLEEN, W. June 167
WILKINS, A. F. .. .. Oct. 298
WINTLE, M. F. .. .. July 197

YORKE, R., and MCLACHLAN, K. R. .. .. July 222

ZEPLER, E. E. .. .. Feb. 51
ZEPLER, E. E., and SRIVASTAVA, S. S. .. May 146